Tenant Site: Johnny Cake / MPLSMN3422
Fixed Asset Number: 10122684
Market – Minnesota
Landlord Site Name: Valleywood

SECOND AMENDMENT TO LEASE AGREEMENT

This Second Amendment to Lease Agreement ("**Amendment**") is made as of the date the last party to execute this Amendment ("**Effective Date**") set forth below by and between the City of Apple Valley, a Minnesota municipal corporation ("**Landlord**") and New Cingular Wireless PCS, LLC, a Delaware limited liability company ("**Tenant**"). Landlord and Tenant are jointly hereinafter referred to as the "Parties".

RECITALS:

A. Landlord and Tenant entered into a Lease Agreement dated June 26, 2008 which lease was amended May 10, 2012 (collectively the "**Lease**"), with respect to Premises located at 4863 McAndrews Road, Apple Valley, Minnesota 55124.

B. Landlord and Tenant desire to enter into this Amendment in order to modify and amend certain provisions of the Lease.

AGREEMENT

NOW, THEREFORE, in consideration of the facts set forth in the Recitals above, the mutual covenants and conditions set forth herein, and for other good and valuable consideration, the receipt and sufficiency of which is hereby acknowledged, the Parties hereby agree as follows:

1. Installation of New Equipment. Effective as of the Effective Date, Tenant is hereby allowed to remove, replace and install such additional temporary and permanent equipment as specifically set forth on Exhibit A attached hereto and incorporated herein ("**Additional Equipment**"). The Additional Equipment set forth on Exhibit A shall be constructed and installed in accordance with the plans and specifications as set forth on Exhibit A and in accordance with the rules and regulations of Landlord and state and local laws and building codes. Except as set forth on Exhibit A, Tenant shall not be allowed to make any other additions or replacements of any equipment or Antenna Facilities without Landlord's prior written consent. Nothing contained in this Amendment shall be deemed a waiver of any provision(s) in the Lease that requires Tenant to obtain Landlord's consent for any improvements or changes to Tenant's equipment in the future. Any Additional Equipment that is identified as temporary shall be removed within twelve (12) months of the Effective Date.

2. Construction Standards. All work to be performed by Tenant and its contractors, agents, and employees shall be done in a good and workmanlike manner and

in accordance with the plans and specifications set forth on Exhibit A. Tenant shall not be permitted in any material way to vary its construction from the plans and specifications set forth on Exhibit A without Landlord's prior written consent.

3. Tenant shall pay for all work to be performed upon the Property and shall not allow a lien to attach to the Property. Tenant shall defend, indemnify and hold harmless Landlord from any and all costs, charges, liens, suits, actions, and expenses including but not limited to attorney's fees and court costs, arising out of or related to: (1) Tenant's negligence or misconduct in the installation, use, operation, maintenance and presence of the Additional Equipment, Tenant's Antenna Facilities or any other equipment of Tenant or its agents, contractors or assigns; (2) Tenant's, or tenant's agent's, contractor's or employee's entry or presence upon the Property; and (3) any default, beyond any applicable cure periods, by Tenant under the Lease and any amendments thereto. The terms and conditions of this paragraph shall survive the expiration or earlier termination of the Lease and this Amendment.

4. Costs of Review. Tenant shall be responsible for all costs of Landlord's inspection, installation, project management costs, review fees, staff time, and any and all other fees and expenses incurred by Landlord in reviewing and approving Tenant's application for this Amendment of the Lease. All such fees shall include all attorneys' fees, staff and administrative review time and third party consultant fees and expenses all of which shall be at the expense of Tenant. All such fees and invoices must be paid by Tenant to Landlord within sixty (60) days after Landlord sends Tenant an itemized invoice for the same. Any invoices or other sums owed to Landlord, under the Lease or this Amendment, which are not paid by Tenant within sixty (60) days after such sums become due and owing shall: (1) be a material default under the Lease; and (2) bear interest at the lesser of fifteen percent (15%) per annum or the maximum rate allowed by law. The terms of this paragraph shall survive the expiration or earlier termination of the Lease.

5. Rent Increase. Notwithstanding anything in the Lease or this Amendment to the contrary, Landlord and Tenant agree that because Tenant's contemplated improvements include the installation of additional antennas, the rent owed by Tenant under the Lease shall increase as described herein. Commencing the earlier of: (1) the start of Tenant's construction of the Additional Equipment; or (2) April 1, 2016, the rent owed by Tenant pursuant to the Lease and this Amendment shall increase by Seven Thousand Eight Hundred Thirteen and 80/100 Dollars ($7,813.80) per year ("**Rent Increase**). The Rent Increase shall be subject to annual CPI and percentage increases as further described in the Lease. If applicable, for the year 2016, the Rent Increase shall be pro-rated to the date of this Amendment and Tenant shall pay the pro-rated Rent Increase for 2016 upon execution of this Amendment. The Rent Increase for 2016 and each year thereafter, including any CPI and percentage increases as provided in the Lease, shall be due and payable with when the rent is due to Landlord pursuant to the Lease.

6. Failure to Remove Improvements. Upon termination of the Lease for any reason, Tenant shall remove its Antenna Facilities (including all Additional Equipment) from the Property within one hundred twenty (120) days after the date of termination, and

shall repair any damage to the Property caused by such equipment, normal wear and tear, and casualty excepted; all at Tenant's sole cost and expense, whether removed by Tenant or Landlord. Any such personal property or facilities which are not removed on or before the date this Lease terminates shall, at Landlord's option, be deemed abandoned and become the property of Landlord. In the event Tenant leaves any personal property, equipment or any portion of its facilities on the Property without Landlord's written consent, Tenant shall reimburse Landlord for the cost of removing and disposing of the same. Tenant shall be responsible for paying Base Rent and all other sums owed under this Lease until such time that Landlord or Tenant has removed the Antenna Facilities from the Property. In the event Landlord attempts to collect on any unpaid sums owed by Tenant under the Lease or this Amendment or Landlord brings any other action to enforce the terms of the Lease, as amended, including, but not limited to, Tenant's removal of its Antenna Facilities, Tenant shall be responsible for all costs of collection including, but not limited to, attorneys' fees, court costs, and expert witness fees whether or not Landlord files suit against Tenant. The terms of this Section shall survive the termination or other expiration of this Lease.

7. Indemnification. Tenant further agrees to indemnify, defend and hold Landlord harmless from any and all claims, costs, penalties, fines, lawsuits, demands, and expenses, including attorney's fees and court costs, arising out of or related to any negligence or misconduct in any entry upon the Property by Tenants agents, contractors, and employees. All indemnification obligations of Tenant as set forth in the Lease and this Amendment shall survive the termination or expiration of the Lease. Notwithstanding anything to the contrary in this Lease, Tenant will not be liable for, or indemnify Landlord against, punitive, indirect, incidental, special or consequential damages, including, without limitation, loss of income or business opportunities.

8. Limitation of Landlord's Liability; Early Termination. Landlord's liability for damages to Tenant under the Lease and this Amendment shall be limited to the actual and direct costs of equipment removal and shall specifically exclude any recovery for value of the business of Tenant as a going concern, future expectation of profits, loss of business or profit or related damages to Tenant.

9. No Waiver. Nothing contained in this Amendment shall be construed as waiving a party's right to insist that the other party comply with each and every provision of the Lease, including, but not limited to Tenant's obligation to seek Landlord's approval before Tenant may install or replace any equipment beyond that shown and identified in the exhibits to the Lease, Exhibit A to this Amendment and any other amendments to the Lease.

10. Notice. Tenant's notice address shall be as follows:

If to Tenant: New Cingular Wireless PCS, LLC
Attn: Network Real Estate Administration
Re: Cell Site #: MPLSMN3422; Cell Site Name: Johnny Cake (MN)
FA No: 10122684
575 Morosgo Drive NE
Atlanta, GA 30324

With a copy to: New Cingular Wireless PCS, LLC
Attn: Legal Department
Re: Cell Site #: MPLSMN3422; Cell Site Name: Johnny Cake (MN)
FA No: 10122684
208 S. Akard Street
Dallas, TX 75202-4206

Landlord's notices shall be sent to:

City of Apple Valley
Attn.: City Clerk
7100 – 147th Street West
Apple Valley, MN 55124

with a copy to: Dougherty, Molenda, Solfest, Hills & Bauer P.A.
Attn.: Michael G. Dougherty, City Attorney
14985 Glazier Avenue, Suite 525
Apple Valley, MN 55124

11. Conflict. In the event of a conflict between any of the terms contained in this Amendment and any terms contained in the Lease, the terms of this Amendment shall govern.

12. Affirmation of Lease. Except as set forth herein, all terms and conditions of the Lease shall remain in full force and effect.

13. Construction. Landlord and Tenant agree that each of them has participated in the drafting of the Lease, this Amendment and any other amendments (collectively the "**Agreement**") and that the Agreement shall not be construed against the party that drafted it. Both Landlord and Tenant acknowledge and agree that any Court interpreting the Agreement shall not construe any portion of the Agreement in favor of or against Landlord or Tenant based upon any rule of law or construction that would construe the Agreement against the party that drafted it.

14. Counterparts. This Amendment may be executed in duplicate counterparts, each of which will be deemed an original. The parties may also execute this document by electronic means, including but not limited to fax, pdf or other electronic means and delivery of this Amendment by electronic means shall be effective as an original.

15. Authority. Each of the Parties represents and warrants that it has the right, power, and legal capacity and authority to enter into this Amendment.

[The remainder of this page has been intentionally left blank. Signature page to follow.]

IN WITNESS WHEREOF, the Parties have set their hands as of the date set forth below.

"LANDLORD"
CITY OF APPLE VALLEY:

Dated: _____

_____
By: Mary Hamann-Roland
Its: Mayor

Dated: _____

_____
By: Pamela J. Gackstetter
Its: City Clerk

"TENANT"
New Cingular Wireless PCS, LLC,
a Delaware limited liability company
By: AT&T Mobility Corporation
Its: Manager

Dated: _____

M Burmeister
By: Name: Maria Burmeister
Its: Title: Manager of Real Estate & Construction
Date: 2/8/14

TENANT ACKNOWLEDGEMENT

STATE OF Minnesota

COUNTY OF Ramsey

I certify that I know or have satisfactory evidence that Maria Bummeister is the person who appeared before me, and said person acknowledged that he signed this instrument, on oath stated that he was authorized to execute the instrument and acknowledged it as the REC Manager of AT&T Mobility Corporation, the Manager of New Cingular Wireless PCS, LLC, to be the free and voluntary act of such party for the uses and purposes mentioned in the instrument.

Kathy L Leners
Notary Public

Printed Name: _____

KATHY LYNN LENERS
Notary Public
State of Minnesota
My Commission Expires
January 31, 2021

My Commission Expires: _____

LANDLORD ACKNOWLEDGEMENT

STATE OF _____

COUNTY OF _____

On the ____ day of _____ in the year _____ before me, the undersigned, personally appeared _____, personally known to me or proved to me on the basis of satisfactory evidence to be the individual(s) whose name(s) is (are) subscribed to the within instrument and acknowledged to me that he/she/they executed the same in his/her/their capacity(ies), and that by his/her/their signature(s) on the instrument, the individual(s), or the person upon behalf of which the individual(s) acted, executed the instrument.

_____
Notary Public

Printed Name: _____

My Commission Expires: _____

EXHIBIT A

PLANS AND SPECIFICATIONS

(See attached Construction Drawings Dated 12/03/15 consisting of 12 pages)

AT&T MOBILITY

PROJECT: LTE2C
AT&T SITE ID: MPLSMNE3422
AT&T FA#: 10122684
AT&T PIN#: 3511561744

JOHNNY CAKE
4863 MCANDREWS ROAD
APPLE VALLEY, MN 55124

SITE PHOTO

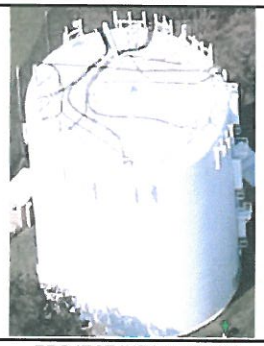

PROJECT INFORMATION

SITE NAME:	JOHNNY CAKE
SITE NUMBER	MPLSMNE3422
USID NUMBER:	99275
SITE ADDRESS:	4863 MCANDREWS ROAD APPLE VALLEY, MN 55124
COUNTY	DAKOTA
LATITUDE (NAD 83):	44° 46' 9.710" N 44.769364°
LONGITUDE (NAD 83):	93° 9' 38.779" W -93.160772°
GROUND ELEVATION:	–
ZONING DISTRICT:	–
TOWER OWNER:	–
GROUND OWNER:	–
LANDLORD CONTACT:	CITY OF APPLE VALLEY 7100 147TH STREET W APPLE VALLEY, MN 55124
POWER COMPANY:	– –
TELEPHONE COMPANY:	FRONTIER –
SITE ACQUISITION MANAGER:	JACQUELINE HALL (312) 342-5236 JACQUELINE.HALL@SACW.COM
CONSTRUCTION MANAGER:	DAVID AUSTIN (651) 263-6617 DAVID.AUSTIN@SACW.COM
A&E DESIGN COMPANY:	LETS AMERICA INC. (480) 961-9151 INFO@LETSINC.COM
PROJECT MANAGER:	AMY HUTCHINGS (312) 804-4269 AMY.HUTCHINGS@SACW.COM

AREA MAP

VICINITY MAP

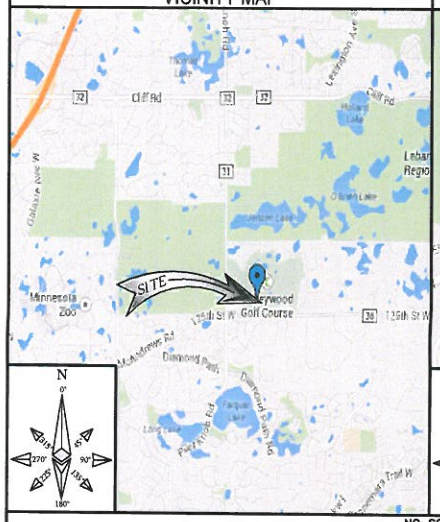

LOCAL MAP

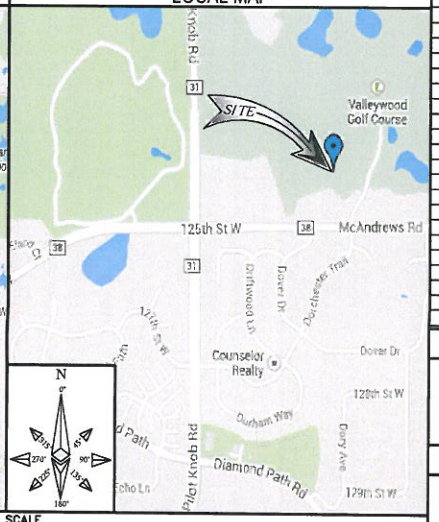

NO SCALE

DRIVING DIRECTIONS

DIRECTIONS FROM 4300 MARKET POINTE DRIVE:

GO STRAIGHT (S) ON JOHNSON AVE S, TURN LEFT ONTO W 78TH STREET, TURN RIGHT ONTO CR 17, KEEP RIGHT ONTO I-494 RAMP, TAKE EXIT 2C, KEEP RIGHT ONTO SR 77 RAMP, GO STRAIGHT (S) ON SR 77 RAMP, KEEP RIGHT ONTO CR 38 RAMP, TURN LEFT ONTO CR 38, TURN LEFT ONTO LOCAL ROAD, SITE IS ON THE RIGHT.

ENGINEERING

2009 INTERNATIONAL BUILDING CODE
2008 NATIONAL ELECTRIC CODE
TIA/EIA-222-G

DRAWING INDEX

SHEET NO:	SHEET TITLE
T1	TITLE PAGE
SP1	GENERAL NOTES
⚠ SP2	PAINTING NOTES
A1	COMPOUND PLANS
A2	EQUIPMENT PLAN
A3	TOWER ELEVATION
A4	ANTENNA & COAX PLANS
A5	TOWER TOP DIAGRAMS
A6	TOWER EQUIPMENT DETAILS
A7	TOWER EQUIPMENT DETAILS
A8	GROUNDING DETAILS
A9	COAX COLOR CODE CHART

RFDS (RADIO FREQUENCY DATA SHEET) DATED

03/07/2014

11"x17" PLOT WILL BE HALF SCALE UNLESS OTHERWISE NOTED

TO OBTAIN LOCATION OF PARTICIPANTS UNDERGROUND FACILITIES BEFORE YOU DIG IN MINNESOTA, CALL GOPHER STATE ONE CALL
TOLL FREE: 1-800-252-1166 OR
FAX A LOCATE: 1-800-236-4967

MN STATUTE REQUIRES MIN OF 48 HOURS NOTICE BEFORE YOU EXCAVATE

-THESE PLANS ADHERE TO ALL OF THE REQUIREMENTS CALLED OUT IN THE JURISDICTION PLANNING AND ZONING FOR ANTENNAS AND SUPPORT STRUCTURES WHERE SITE IS LOCATED.
-SUBCONTRACTOR SHALL VERIFY ALL PLANS AND EXISTING CONDITIONS ON SITE. IMMEDIATELY NOTIFY ENGINEER OF ANY DISCREPANCIES PRIOR TO PERFORMING ANY WORK OR BE RESPONSIBLE FOR THE SAME

at&t
4300 MARKET POINT DRIVE
BLOOMINGTON, MN 55435

SAC WIRELESS ENGINEERING GROUP
1501 E. WOODFIELD ROAD, SUITE #300E
SCHAUMBURG, IL 60173
www.sacw.com
847-944-1600

LETS
LETS America, Inc.
112 S. KYRENE RD. STE. 1
CHANDLER, AZ 85226
ARIZONA: 480-961-9151

SITE ID:	MPLSMNE3422
DRAWN BY:	LETS
CHECKED BY:	MC

REV	DATE	DESCRIPTION
⚠	12/03/15	CLIENT COMMENTS
D	05/19/14	ISSUED FOR CONSTRUCTION
B	03/24/14	ISSUED FOR REVIEW
A	03/21/14	ISSUED FOR REVIEW

I hereby certify that this plan, specification, or report was prepared by me or under my direct supervision and that I am a duly Licensed Professional Structural Engineer under the laws of the State of Minnesota.
Print Name: MADHAN KUMAR KANTHA SAMY
Signature:
Date: 12/03/15 License # 51479

IT IS A VIOLATION OF LAW FOR ANY PERSON, UNLESS THEY ARE ACTING UNDER THE DIRECTION OF A LICENSED PROFESSIONAL ENGINEER, TO ALTER THIS DOCUMENT.

3511561572
MPLSMNE3422_10122684
JOHNNY CAKE
4863 MCANDREWS ROAD
APPLE VALLEY, MN 55124
LTE 2C

SHEET TITLE
TITLE PAGE

SHEET NUMBER
T1

THE INFORMATION CONTAINED IN THIS SET OF CONSTRUCTION DOCUMENTS IS PROPRIETARY BY NATURE. ANY USE OR DISCLOSURE OTHER THAN THAT WHICH RELATES TO CARRIER SERVICES IS STRICTLY PROHIBITED.

GENERAL CONSTRUCTION

1. FOR THE PURPOSE OF CONSTRUCTION DRAWINGS, THE FOLLOWING DEFINITIONS SHALL APPLY:
   GENERAL CONTRACTOR – OVERLAND CONTRACTING INC. (O&V)
   CONTRACTOR: (CONSTRUCTION)
   OWNER – AT&T
2. ALL SITE WORK SHALL BE COMPLETED AS INDICATED ON THE DRAWINGS AND AT&T PROJECT SPECIFICATIONS.
3. GENERAL CONTRACTOR SHALL VISIT THE SITE AND SHALL FAMILIARIZE HIMSELF WITH ALL CONDITIONS AFFECTING THE PROPOSED WORK AND SHALL MAKE PROVISIONS. GENERAL CONTRACTOR SHALL BE RESPONSIBLE FOR FAMILIARIZING HIMSELF WITH ALL CONTRACT DOCUMENTS, FIELD CONDITIONS, DIMENSIONS, AND CONFIRMING THAT THE WORK MAY BE ACCOMPLISHED AS SHOWN PRIOR TO PROCEEDING WITH CONSTRUCTION. ANY DISCREPANCIES SHALL BE BROUGHT TO THE ATTENTION OF THE ENGINEER PRIOR TO THE COMMENCEMENT OF WORK.
4. ALL MATERIALS FURNISHED AND INSTALLED SHALL BE IN STRICT ACCORDANCE WITH ALL APPLICABLE CODES, REGULATIONS, AND ORDINANCES. GENERAL CONTRACTOR SHALL ISSUE ALL APPROPRIATE NOTICES AND COMPLY WITH ALL LAWS, ORDINANCES, RULES, REGULATIONS, AND LAWFUL ORDERS OF ANY PUBLIC AUTHORITY REGARDING THE PERFORMANCE OF WORK.
5. ALL WORK CARRIED OUT SHALL COMPLY WITH ALL APPLICABLE MUNICIPAL AND UTILITY COMPANY SPECIFICATIONS AND LOCAL JURISDICTIONAL CODES, ORDINANCES, AND APPLICABLE REGULATIONS.
6. UNLESS NOTED OTHERWISE, THE WORK SHALL INCLUDE FURNISHING MATERIALS, EQUIPMENT, APPURTENANCES, AND LABOR NECESSARY TO COMPLETE ALL INSTALLATIONS AS INDICATED ON THE DRAWINGS.
7. PLANS ARE NOT TO BE SCALED. THESE PLANS ARE INTENDED TO BE A DIAGRAMMATIC OUTLINE ONLY UNLESS OTHERWISE NOTED. DIMENSIONS SHOWN ARE TO FINISH SURFACES UNLESS OTHERWISE NOTED. SPACING BETWEEN EQUIPMENT IS THE MINIMUM REQUIRED CLEARANCE. THEREFORE, IT IS CRITICAL TO FIELD VERIFY DIMENSIONS. SHOULD THERE BE ANY QUESTIONS REGARDING THE CONTRACT DOCUMENTS, THE CONTRACTOR SHALL BE RESPONSIBLE FOR OBTAINING A CLARIFICATION FROM THE ENGINEER PRIOR TO PROCEEDING WITH THE WORK. DETAILS ARE INTENDED TO SHOW DESIGN INTENT. MODIFICATIONS MAY BE REQUIRED TO SUIT JOB DIMENSIONS OR CONDITIONS AND SUCH MODIFICATIONS SHALL BE INCLUDED AS PART OF WORK AND PREPARED BY THE ENGINEER PRIOR TO PROCEEDING WITH WORK.
8. THE CONTRACTOR SHALL INSTALL ALL EQUIPMENT AND MATERIALS IN ACCORDANCE WITH MANUFACTURER'S RECOMMENDATIONS UNLESS SPECIFICALLY STATED OTHERWISE.
9. IF THE SPECIFIED EQUIPMENT CANNOT BE INSTALLED AS SHOWN ON THESE DRAWINGS, THE CONTRACTOR SHALL PROPOSE AN ALTERNATIVE INSTALLATION SPACE FOR APPROVAL BY THE ENGINEER PRIOR TO PROCEEDING.
10. GENERAL CONTRACTOR SHALL BE RESPONSIBLE FOR THE SAFETY OF WORK AREA, ADJACENT AREAS AND BUILDING OCCUPANTS THAT ARE LIKELY TO BE AFFECTED BY THE WORK UNDER THIS CONTRACT. WORK SHALL CONFIRM TO ALL OSHA REQUIREMENTS AND THE LOCAL JURISDICTION.
11. GENERAL CONTRACTOR SHALL COORDINATE WORK AND SCHEDULE WORK ACTIVITIES WITH OTHER DISCIPLINES.
12. ERECTION SHALL BE DONE IN A WORKMANLIKE MANNER BY COMPETENT EXPERIENCED WORKMAN IN ACCORDANCE WITH APPLICABLE CODES AND THE BEST ACCEPTED PRACTICE. ALL MEMBERS SHALL BE LAID PLUMB AND TRUE AS INDICATED ON THE DRAWINGS.
13. SEAL PENETRATIONS THROUGH FIRE RATED AREAS WITH UL LISTED MATERIALS APPROVED BY LOCAL JURISDICTION. CONTRACTOR SHALL KEEP AREA CLEAN, HAZARD FREE, AND DISPOSE OF ALL DEBRIS.
14. WORK PREVIOUSLY COMPLETED IS REPRESENTED BY LIGHT SHADED LINES AND NOTES. THE SCOPE OF WORK FOR THIS PROJECT IS REPRESENTED BY DARK SHADED LINES AND NOTES. CONTRACTOR SHALL NOTIFY THE GENERAL CONTRACTOR OF ANY EXISTING CONDITIONS THAT DEVIATE FROM THE DRAWINGS PRIOR TO BEGINNING CONSTRUCTION.
15. CONTRACTOR SHALL PROVIDE WRITTEN NOTICE TO THE CONSTRUCTION MANAGER 48 HOURS PRIOR TO COMMENCEMENT OF WORK.
16. THE CONTRACTOR SHALL PROTECT EXISTING IMPROVEMENTS, PAVEMENTS, CURBS, LANDSCAPING AND STRUCTURES. ANY DAMAGED PART SHALL BE REPAIRED AT CONTRACTOR'S EXPENSE TO THE SATISFACTION OF THE OWNER.
17. THE CONTRACTOR SHALL CONTACT UTILITY LOCATING SERVICES PRIOR TO THE START OF CONSTRUCTION.
18. GENERAL CONTRACTOR SHALL COORDINATE AND MAINTAIN ACCESS FOR ALL TRADES AND CONTRACTORS TO THE SITE AND/OR BUILDING.
19. THE GENERAL CONTRACTOR SHALL BE RESPONSIBLE FOR SECURITY OF THE SITE FOR THE DURATION OF CONSTRUCTION UNTIL JOB COMPLETION.
20. THE GENERAL CONTRACTOR SHALL MAINTAIN IN GOOD CONDITION ONE COMPLETE SET OF PLANS WITH ALL REVISIONS, ADDENDA, AND CHANGE ORDERS ON THE PREMISES AT ALL TIMES.
21. THE GENERAL CONTRACTOR SHALL PROVIDE PORTABLE FIRE EXTINGUISHERS WITH A RATING OF NOT LESS THAN 2-A OT 2-A:10-B:C AND SHALL BE WITHIN 25 FEET OF TRAVEL DISTANCE TO ALL PORTIONS OF WHERE THE WORK IS BEING COMPLETED DURING CONSTRUCTION.
22. ALL EXISTING ACTIVE SEWER, WATER, GAS, ELECTRIC, AND OTHER UTILITIES SHALL BE PROTECTED AT ALL TIMES, AND WHERE REQUIRED FOR THE PROPER EXECUTION OF THE WORK, SHALL BE RELOCATED AS DIRECTED BY THE ENGINEER. EXTREME CAUTION SHOULD BE USED BY THE CONTRACTOR WHEN EXCAVATING OR DRILLING PIERS AROUND OR NEAR UTILITIES. CONTRACTOR SHALL PROVIDE SAFETY TRAINING FOR THE WORKING CREW. THIS SHALL INCLUDE BUT NOT BE LIMITED TO A) FALL PROTECTION, B) CONFINED SPACE, C) ELECTRICAL SAFETY, AND D) TRENCHING & EXCAVATION.
23. ALL EXISTING INACTIVE SEWER, WATER, GAS, ELECTRIC, AND OTHER UTILITIES, WHICH INTERFERE WITH THE EXECUTION OF THE WORK, SHALL BE REMOVED, CAPPED, PLUGGED OR OTHERWISE DISCONNECTED AT POINTS WHICH WILL NOT INTERFERE WITH THE EXECUTION OF THE WORK, AS DIRECTED BY THE RESPONSIBLE ENGINEER, AND SUBJECT TO THE APPROVAL OF THE OWNER AND/OR LOCAL UTILITIES.
24. THE AREAS OF THE OWNER'S PROPERTY DISTURBED BY THE WORK AND NOT COVERED BY THE TOWER, EQUIPMENT OR DRIVEWAY, SHALL BE GRADED TO A UNIFORM SLOPE, AND STABILIZED TO PREVENT EROSION.
25. CONTRACTOR SHALL MINIMIZE DISTURBANCE TO THE EXISTING SITE DURING CONSTRUCTION. EROSION CONTROL MEASURES, IF REQUIRED DURING CONSTRUCTION, SHALL BE IN CONFORMANCE WITH THE FEDERAL AND LOCAL JURISDICTION FOR EROSION AND SEDIMENT CONTROL.
26. NO FILL OR EMBANKMENT MATERIAL SHALL BE PLACED ON FROZEN GROUNDING. FROZEN MATERIALS, SNOW OR ICE SHALL NOT BE PLACED IN ANY FILL OR EMBANKMENT.
27. THE SUBGRADE SHALL BE BROUGHT TO A SMOOTH UNIFORM GRADE AND COMPACTED TO 95 PERCENT STANDARD PROCTOR DENSITY UNDER PAVEMENT AND STRUCTURES AND 90 PERCENT STANDARD PROCTOR DENSITY IN OPEN SPACE. ALL TRENCHES IN PUBLIC RIGHT OF WAY SHALL BE BACKFILLED WITH FLOWABLE FILL OR OTHER MATERIAL PRE-APPROVED BY THE LOCAL JURISDICTION.
28. ALL NECESSARY RUBBISH, STUMPS, DEBRIS, STICKS, STONES, AND OTHER REFUSE SHALL BE REMOVED FROM THE SITE AND DISPOSED OF IN A LAWFUL MANNER.
29. ALL BROCHURES, OPERATING AND MAINTENANCE MANUALS, CATALOGS, SHOP DRAWINGS, AND OTHER DOCUMENTS SHALL BE TURNED OVER TO THE GENERAL CONTRACTOR AT COMPLETION OF CONSTRUCTION AND PRIOR TO PAYMENT.
30. CONTRACTOR SHALL SUBMIT A COMPLETE SET OF AS-BUILT REDLINES TO THE GENERAL CONTRACTOR UPON COMPLETION OF PROJECT AND PRIOR TO FINAL PAYMENT.
31. CONTRACTOR SHALL LEAVE PREMISES IN A CLEAN CONDITION.
32. THE PROPOSED FACILITY WILL BE UNMANNED AND DOES NOT REQUIRE POTABLE WATER OR SEWER SERVICE, AND IS NOT FOR HUMAN HABITAT (NO HANDICAP ACCESS REQUIRED).
33. OCCUPANCY IS LIMITED TO PERIODIC MAINTENANCE AND INSPECTION, APPROXIMATELY 2 TIMES PER MONTH, BY AT&T TECHNICIANS.
34. NO OUTDOOR STORAGE OR SOLID WASTE CONTAINERS ARE PROPOSED.
35. ALL MATERIAL SHALL BE FURNISHED AND WORK SHALL BE PERFORMED IN ACCORDANCE WITH THE LATEST REVISION AT&T MOBILITY GROUNDING STANDARD "TECHNICAL SPECIFICATION FOR CONSTRUCTION OF GSM/GPRS WIRELESS SITES" AND "TECHNICAL SPECIFICATION FOR FACILITY GROUNDING". IN CASE OF A CONFLICT BETWEEN THE CONSTRUCTION SPECIFICATION AND THE DRAWINGS, THE DRAWINGS SHALL GOVERN.
36. CONTRACTORS SHALL BE RESPONSIBLE FOR OBTAINING ALL PERMITS AND INSPECTIONS REQUIRED FOR CONSTRUCTION. IF CONTRACTOR CANNOT OBTAIN A PERMIT, THEY MUST NOTIFY THE GENERAL CONTRACTOR IMMEDIATELY.
37. CONTRACTOR SHALL REMOVE ALL TRASH AND DEBRIS FROM THE SITE ON A DAILY BASIS.
38. INFORMATION SHOWN ON THESE DRAWINGS WAS OBTAINED FROM SITE VISITS AND/OR DRAWINGS PROVIDED BY THE SITE OWNER. CONTRACTORS SHALL NOTIFY THE ENGINEER OF ANY DISCREPANCIES PRIOR TO ORDERING MATERIAL OR PROCEEDING WITH CONSTRUCTION.
39. NO WHITE STROBE LIGHTS ARE PERMITTED. LIGHTING IF REQUIRED, WILL MEET FAA STANDARDS AND REQUIREMENTS.
40. ALL COAXIAL CABLE INSTALLATIONS TO FOLLOW MANUFACTURER'S INSTRUCTIONS AND RECOMMENDATIONS.

ANTENNA MOUNTING

41. DESIGN AND CONSTRUCTION OF ANTENNA SUPPORTS SHALL CONFORM TO CURRENT ANSI/TIA-222 OR APPLICABLE LOCAL CODES.
42. ALL STEEL MATERIALS SHALL BE GALVANIZED AFTER FABRICATION IN ACCORDANCE WITH ASTM A123 "ZINC (HOT-DIP GALVANIZED) COATINGS ON IRON AND STEEL PRODUCTS", UNLESS NOTED OTHERWISE.
43. ALL BOLTS, ANCHORS AND MISCELLANEOUS HARDWARE SHALL BE GALVANIZED IN ACCORDANCE WITH ASTM A153 "ZINC-COATING (HOT-DIP) ON IRON AND STEEL HARDWARE", UNLESS NOTED OTHERWISE.
44. DAMAGED GALVANIZED SURFACES SHALL BE REPAIRED BY COLD GALVANIZING IN ACCORDANCE WITH ASTM A780.
45. ALL ANTENNA MOUNTS SHALL BE INSTALLED WITH LOCK NUTS, DOUBLE NUTS AND SHALL BE TORQUED TO MANUFACTURER'S RECOMMENDATIONS.
46. CONTRACTOR SHALL INSTALL ANTENNA PER MANUFACTURER'S RECOMMENDATION FOR INSTALLATION AND GROUNDING.
47. ALL UNUSED PORTS ON ANY ANTENNAS SHALL BE TERMINATED WITH A 50-OHM LOAD TO ENSURE ANTENNAS PERFORM AS DESIGNED.
48. PRIOR TO SETTING ANTENNA AZIMUTHS AND DOWNTILTS, ANTENNA CONTRACTOR SHALL CHECK THE ANTENNA MOUNT FOR TIGHTNESS AND ENSURE THAT THEY ARE PLUMB. ANTENNA AZIMUTHS SHALL BE SET FROM TRUE NORTH AND BE ORIENTED WITHIN +/- 5% AS DEFINED BY THE RFDS. ANTENNA DOWNTILTS SHALL BE WITHIN +/- 0.5% AS DEFINED BY THE RFDS. REFER TO ND-00246.
49. JUMPERS FROM THE TMA'S MUST TERMINATE TO OPPOSITE POLARIZATION'S IN EACH SECTOR.
50. CONTRACTOR SHALL RECORD THE SERIAL #, SECTOR, AND POSITION OF EACH ACTUATOR INSTALLED AT THE ANTENNAS AND PROVIDE THE INFORMATION TO AT&T.
51. TMA'S SHALL BE MOUNTED ON PIPE DIRECTLY BEHIND ANTENNAS AS CLOSE TO ANTENNA AS FEASIBLE IN A VERTICAL POSITION.

TORQUE REQUIREMENTS

52. ALL RF CONNECTIONS SHALL BE TIGHTENED BY A TORQUE WRENCH.
53. ALL RF CONNECTIONS, GROUNDING HARDWARE AND ANTENNA HARDWARE SHALL HAVE A TORQUE MARK INSTALLED IN A CONTINUOUS STRAIGHT LINE FROM BOTH SIDES OF THE CONNECTION.
    A. RF CONNECTION BOTH SIDES OF THE CONNECTOR.
    B. GROUNDING AND ANTENNA HARDWARE ON THE NUT SIDE STARTING FROM THE THREADS TO THE SOLID SURFACE. EXAMPLE OF SOLID SURFACE: GROUND BAR, ANTENNA BRACKET METAL.
54. ALL 8M ANTENNA HARDWARE SHALL BE TIGHTENED TO 9 LB-FT (12 NM).
55. ALL 12M ANTENNA HARDWARE SHALL BE TIGHTENED TO 43 LB-FT (58 NM).
56. ALL GROUNDING HARDWARE SHALL BE TIGHTENED UNTIL THE LOCK WASHER COLLAPSES AND THE GROUNDING HARDWARE IS NO LONGER LOOSE.
57. ALL DIN TYPE CONNECTIONS SHALL BE TIGHTENED TO 18-22 LB-FT (24.4 – 29.8 NM).
58. ALL N TYPE CONNECTIONS SHALL BE TIGHTENED TO 15-20 LB-IN (1.7 – 2.3 NM).

FIBER & POWER CABLE MOUNTING

59. THE FIBER OPTIC TRUNK CABLES SHALL BE INSTALLED INTO CONDUITS, CHANNEL CABLE TRAYS, OR CABLE TRAY. WHEN INSTALLING FIBER OPTIC TRUNK CABLES INTO A CABLE TRAY SYSTEM, THEY SHALL BE INSTALLED INTO AN INTER DUCT AND A PARTITION BARRIER SHALL BE INSTALLED BETWEEN THE 600 VOLT CABLES AND THE INTER DUCT IN ORDER TO SEGREGATE CABLE TYPES. OPTIC FIBER TRUNK CABLES SHALL HAVE APPROVED CABLE RESTRAINTS EVERY (60) SIXTY FEET AND SECURELY FASTENED TO THE CABLE TRAY SYSTEM. NFPA 70 (NEC) ARTICLE 770 RULES SHALL APPLY.
60. THE TYPE TC-ER CABLES SHALL BE INSTALLED INTO CONDUITS, CHANNEL CABLE TRAYS, OR CABLE TRAY AND SHALL BE SECURED AT INTERVALS NOT EXCEEDING (6) SIX FEET. AN EXCEPTION; WHERE TYPE TC-ER CABLES ARE NOT SUBJECT TO PHYSICAL DAMAGE, CABLES SHALL BE PERMITTED TO MAKE A TRANSITION BETWEEN CONDUITS, CHANNEL CABLE TRAYS, OR CABLE TRAY WHICH ARE SERVING UTILIZATION EQUIPMENT OR DEVICES, A DISTANCE (6) SIX FEET SHALL NOT BE EXCEEDED WITHOUT CONTINUOUS SUPPORTING. NFPA 70 (NEC) ARTICLES 336 AND 392 RULES SHALL APPLY.
61. WHEN INSTALLING OPTIC FIBER TRUNK CABLES OR TYPE TC-ER CABLES INTO CONDUITS, NFPA 70 (NEC) ARTICLE 300 RULES SHALL APPLY.

COAXIAL CABLE NOTES

62. TYPES AND SIZES OF THE ANTENNA CABLE ARE BASED ON ESTIMATED LENGTHS. PRIOR TO ORDERING CABLE, CONTRACTOR SHALL VERIFY ACTUAL LENGTH BASED ON CONSTRUCTION LAYOUT AND NOTIFY THE PROJECT MANAGER IF ACTUAL LENGTHS EXCEED ESTIMATED LENGTHS.
63. CONTRACTOR SHALL VERIFY THE DOWN-TILT OF EACH ANTENNA WITH A DIGITAL LEVEL.
64. CONTRACTOR SHALL CONFIRM COAX COLOR CODING PRIOR TO CONSTRUCTION. REFER TO "ANTENNA SYSTEM LABELING STANDARD" ND-00027 LATEST VERSION.
65. ALL JUMPERS TO THE ANTENNAS FROM THE MAIN TRANSMISSION LINE SHALL BE 1/2" DIA. LDF AND SHALL NOT EXCEED 6'-0".
66. ALL COAXIAL CABLE SHALL BE SECURED TO THE DESIGNED SUPPORT STRUCTURE, IN AN APPROVED MANNER, AT DISTANCES NOT TO EXCEED 4'-0" OC.
67. CONTRACTOR SHALL FOLLOW ALL MANUFACTURER'S RECOMMENDATIONS REGARDING BOTH THE INSTALLATION AND GROUNDING OF ALL COAXIAL CABLES, CONNECTORS, ANTENNAS, AND ALL OTHER EQUIPMENT.
68. CONTRACTOR SHALL WEATHERPROOF ALL ANTENNA CONNECTORS WITH SELF AMALGAMATING TAPE. WEATHERPROOFING SHALL BE COMPLETED IN STRICT ACCORDANCE WITH AT&T STANDARDS.
69. CONTRACTOR SHALL GROUND ALL EQUIPMENT, INCLUDING ANTENNAS, RET MOTORS, TMA'S, COAX CABLES, AND RET CONTROL CABLES AS A COMPLETE SYSTEM. GROUNDING SHALL BE EXECUTED BY QUALIFIED WIREMEN IN COMPLIANCE WITH MANUFACTURER'S SPECIFICATION AND RECOMMENDATION.
70. CONTRACTOR SHALL PROVIDE STRAIN-RELIEF AND CABLE SUPPORTS FOR ALL CABLE ASSEMBLIES, COAX CABLES, AND RET CONTROL CABLES. CABLE STRAIN-RELIEFS AND CABLE SUPPORTS SHALL BE APPROVED FOR THE PURPOSE. INSTALLATION SHALL BE IN ACCORDANCE WITH MANUFACTURER'S SPECIFICATIONS AND RECOMMENDATIONS.
71. CONTRACTOR TO VERIFY THAT EXISTING COAX HANGERS ARE STACKABLE SNAP IN HANGERS. IF EXISTING HANGERS ARE NOT STACKABLE SNAP IN HANGERS THE CONTRACTOR SHALL REPLACE EXISTING HANGERS WITH NEW SNAP IN HANGERS IF APPLICABLE.

GENERAL CABLE AND EQUIPMENT NOTES

72. CONTRACTOR SHALL BE RESPONSIBLE TO VERIFY ANTENNA, TMAS, DIPLEXERS, AND COAX CONFIGURATION, MAKE AND MODELS PRIOR TO INSTALLATION.
73. ALL CONNECTIONS FOR HANGERS, SUPPORTS, BRACING, ETC. SHALL BE INSTALLED PER TOWER MANUFACTURER'S RECOMMENDATIONS.
74. CONTRACTOR SHALL REFERENCE THE TOWER STRUCTURAL ANALYSIS/DESIGN DRAWINGS FOR DIRECTIONS ON CABLE DISTRIBUTION/ROUTING.
75. ALL OUTDOOR RF CONNECTORS/CONNECTIONS SHALL BE WEATHERPROOFED, EXCEPT THE RET CONNECTORS, USING BUTYL TAPE AFTER INSTALLATION AND FINAL CONNECTIONS ARE MADE. BUTYL TAPE SHALL HAVE A MINIMUM OF ONE-HALF TAPE WIDTH OVERLAP ON EACH TURN AND EACH LAYER SHALL BE WRAPPED THREE TIMES. WEATHERPROOFING SHALL BE SMOOTH WITHOUT BUCKLING. BUTYL BLEEDING IS NOT ALLOWED.
76. IF REQUIRED TO PAINT ANTENNAS AND/OR COAX:
    A. TEMPERATURE SHALL BE ABOVE 50° F.
    B. PAINT COLOR MUST BE APPROVED BY BUILDING OWNER/LANDLORD.
    C. FOR REGULATED TOWERS, FAA/FCC APPROVED PAINT IS REQUIRED.
    D. DO NOT PAINT OVER COLOR CODING OR ON EQUIPMENT MODEL NUMBERS.
77. ALL CABLES SHALL BE GROUNDED WITH COAXIAL CABLE GROUND KITS. FOLLOW THE MANUFACTURER'S RECOMMENDATIONS.
    A. GROUNDING AT THE ANTENNA LEVEL.
    B. GROUNDING AT MID LEVEL, TOWERS WHICH ARE OVER 200'-0", ADDITIONAL CABLE GROUNDING REQUIRED.
    C. GROUNDING AT BASE OF TOWER PRIOR TO TURNING HORIZONTAL.
    D. GROUNDING OUTSIDE THE EQUIPMENT SHELTER AT ENTRY PORT.
    E. GROUNDING INSIDE THE EQUIPMENT SHELTER AT THE ENTRY PORT.
78. ALL PROPOSED GROUND BAR DOWNLEADS ARE TO BE TERMINATED TO THE EXISTING ADJACENT GROUND BAR DOWNLEADS A MINIMUM DISTANCE OF 4'-0" BELOW GROUND BAR. TERMINATIONS MAY BE EXOTHERMIC OR COMPRESSION.
79. THE CONTRACTOR SHALL BE RESPONSIBLE FOR VERIFYING THE ANTENNA AND THE COAX CONFIGURATION IS THE CORRECT MAKE AND MODELS, PRIOR TO INSTALLATION.
80. ALL CONNECTIONS FOR HANGERS, SUPPORTS, BRACING, ETC. SHALL BE INSTALLED PER TOWER MANUFACTURER'S SPECIFICATION & RECOMMENDATIONS.
81. ANTENNA CONTRACTOR SHALL FURNISH AND INSTALL A 12'-0" T-BOOM SECTOR ANTENNA MOUNT, IF APPLICABLE, INCLUDING ALL HARDWARE.
82. NO WELDING OVER COATED STEEL SURFACES IS PERMISSIBLE. THE CONTRACTOR IS RESPONSIBLE TO ADEQUATELY REMOVE ALL COATINGS BEFORE WELDING. ALL AREAS THAT REQUIRE WELDING ARE TO BE ABRASIVE BLASTED OR GROUND BEFORE ANY WELDING IS STARTED.
83. PROTECT ALL AREAS ADJACENT TO WELDING AND/OR GRINDING OPERATIONS TO PREVENT DAMAGE OF SURROUNDING INTACT PAINT SYSTEM(S).
84. EACH CABINET, INTERIOR MOUNTING PIPE, CABLE, OR GROUP OF CABLES (IF ROUTED TOGETHER), SHOULD INCLUDE A TAG CLEARLY IDENTIFYING IT AS AT&T EQUIPMENT. CABLES SHALL BE MARKED AT THE BASE OF THE TOWER, AT THE TOP STIFFENER (WHERE THEY TRANSITION FROM VERTICAL TO HORIZONTAL) AND AT THE ANTENNA LOCATION.
85. THE CONTRACTOR AND SUBCONTRACTORS SHALL PROTECT EXISTING IMPROVEMENTS, PAVEMENTS, CURBS, LANDSCAPING AND STRUCTURES. ANY DAMAGED PART SHALL BE REPAIRED AT CONTRACTOR'S EXPENSE TO THE SATISFACTION OF THE OWNER WITHIN 30 DAYS OF SUBSTANTIAL COMPLETION.

GENERAL NOTES

THE INFORMATION CONTAINED IN THIS SET OF CONSTRUCTION DOCUMENTS IS PROPRIETARY BY NATURE. ANY USE OR DISCLOSURE OTHER THAN THAT WHICH RELATES TO CARRIER SERVICES IS STRICTLY PROHIBITED.

at&t
4300 MARKET POINT DRIVE
BLOOMINGTON, MN 55435

SAC WIRELESS ENGINEERING GROUP
1501 E. WOODFIELD ROAD, SUITE #300E
SCHAUMBURG, IL 60173
www.sacw.com
847-944-1600

LETS
LETS America, Inc.
112 S. KYRENE RD. STE. 1
CHANDLER, AZ 85226
ARIZONA: 480-961-9151

SITE ID:	MPLSMNE3422
DRAWN BY:	LETS
CHECKED BY:	MC

REV	DATE	DESCRIPTION
1	12/03/15	CLIENT COMMENTS
0	05/19/14	ISSUED FOR CONSTRUCTION
B	03/24/14	ISSUED FOR REVIEW
A	03/21/14	ISSUED FOR REVIEW

I hereby certify that this plan, specification, or report was prepared by me or under my direct supervision and that I am a duly Licensed Professional Structural Engineer under the laws of the State of Minnesota.
Print Name: MADHAN KUMAR KANTHA SAMY
Signature:
Date: 12/03/15 License # 51479

IT IS A VIOLATION OF LAW FOR ANY PERSON, UNLESS THEY ARE ACTING UNDER THE DIRECTION OF A LICENSED PROFESSIONAL ENGINEER, TO ALTER THIS DOCUMENT.

3511561572
MPLSMNE3422_10122684
JOHNNY CAKE
4863 MCANDREWS ROAD
APPLE VALLEY, MN 55124
LTE 2C

SHEET TITLE
GENERAL NOTES

SHEET NUMBER
SP1

PAINTING NOTES:

A. ANTENNAS, EXTERIOR COAX CABLES AND EXTERIOR JUMPER CABLES TO BE PAINTED TO MATCH EXISTING TANK COLOR. ALL ITEMS ATTACHED DIRECTLY TO THE TANK, SUCH AS MOUNTING BRACKETS AND SUPPORTS, SHOULD BE PAINTED TO MATCH EXISTING TANK COATING SYSTEM AND COLOR. CABLES MAY REQUIRE SCARIFICATION PRIOR TO COATING.

B. EXPOSED COAXIAL CABLES: PRIOR TO PRIMING, SOLVENT WIPE ALL EXPOSED CABLES WITH THE RECOMMENDED SOLVENT. PRIME THE CABLES AND JUMPER CABLES WITH 2 COATS OF X-I-M COAX CABLE BONDER & SEALER (PRODUCT NO. 1138). AFTER PRIMING APPLY ONE FINISH COAT TO THE CABLES AS DIRECTED BY THE ENGINEER.

C. IF GALVANIZED MATERIALS USED, THE GALVANIZED SURFACES MUST BE SOLVENT WIPED AND BRUSH-BLASTED PRIOR TO COATING.

D. SPECIFICATIONS APPLY TO BOTH SHOP AND FIELD COATING.

E. EXTERIOR SURFACE SPOT REPAIR AND RE-COATING:

a:-SPOT PRIME AND FINISH COAT REPAIRED AREAS AS SPECIFIED BY MANUFACTURER. THE COATING SYSTEM SHALL MATCH THE EXISTING COATING SYSTEM ON THE TOWER. THE EXTERIOR PRIMER SHALL BE TNEMEC HI-BUILD EPOXOLINE SERIES 66 OR TNEMEFASCURE SERIES 161, 4.0-6.0 MILS DFT. THE EXTERIOR INTERMEDIATE COAT SHALL BE TNEMEC HI-BUILD EPOXOLINE SERIES 66 OR TNEME-FASCURE SERIES 161, 4.0-6.0 MILS DFT. THE DFT OF THE PRIMER PLUS THE INTERMEDIATE COAT AT ANY INDIVIDUAL SPOT MEASUREMENT LOCATION SHALL BE 9.0 MILS MINIMUM. THE EXTERIOR FINISH COAT SHALL BE TNEMEC ENDURASHIELD II SERIES 1075-COLOR TO MATCH THE TOWER, 3.0-5.0 MILS DFT. THE TOTAL DRY FILM THICKNESS INCLUDING THE PRIMER AND THE FINISH COAT SHALL BE 11 MILS MINIMUM - 17.0 MILS WITH AN AVERAGE OF 13.0 MILS DFT. THE MINIMUM DRY FILM THICKNESS OF THE COATING AT ANY INDIVIDUAL SPOT LOCATION SHALL BE 12.5 MILS. COLOR SHALL MATCH THE EXISTING COATING TO THE OWNER'S SATISFACTION. COLOR DRAWDOWNS SHALL BE OBTAINED FROM THE PAINT MANUFACTURER FOR THE RESERVOIR OWNER TO CONFIRM COLOR SELECTION(S).

b:-EXTERIOR COATING SHALL BE BY BRUSH AND ROLLER ONLY.

F. INTERIOR WET SURFACE SPOT REPAIR AND RE-COATING:

a:-SPOT BLAST THE INTERIOR WET AREA OF THE TANK AT LOCATIONS DAMAGED DURING INSTALLATION OF NEW EXTERIOR AND INTERIOR DRY ITEMS, INCLUDING ANTENNA AND CABLE SUPPORT BRACKETS AND HANDRAIL, TO AN SSPC-SP-10 NEAR WHITE METAL BLAST. FEATHER EDGES OF EXISTING COATING, AT SPOT BLASTED AREAS, USING SSPC-SP-3 POWER TOOL CLEANING METHODS.

b:-THE INTERIOR WET COATING SYSTEM SHALL BE COMPATIBLE WITH THE EXISTING COATING SYSTEM ON THE TANK. THE INTERIOR WET PRIMER SHALL BE TNEMEC POTAPOX PLUS SERIES N140, 4.0 - 6.0 MILS DRY FILM THICKNESS. THE DFT OF THE

PAINTING NOTES | 2

NOT USED | 1

at&t
4300 MARKET POINT DRIVE
BLOOMINGTON, MN 55435

SAC WIRELESS ENGINEERING GROUP
1501 E. WOODFIELD ROAD, SUITE #300E
SCHAUMBURG, IL 60173
www.sacw.com
847-944-1600

LETS
LETS America, Inc.
112 S. KYRENE RD. STE. 1
CHANDLER, AZ 85226
ARIZONA: 480-961-9151

SITE ID:	MPLSMNE3422
DRAWN BY:	LETS
CHECKED BY:	MC

REV	DATE	DESCRIPTION
1	12/03/15	CLIENT COMMENTS
0	06/19/14	ISSUED FOR CONSTRUCTION
B	03/24/14	ISSUED FOR REVIEW
A	03/21/14	ISSUED FOR REVIEW

I hereby certify that this plan, specification, or report was prepared by me or under my direct supervision and that I am a duly Licensed Professional Structural Engineer under the laws of the State of Minnesota.
Print Name: MADHAN KUMAR KANTHA SAMY
Signature:
Date: 12/03/15 License # 51479

IT IS A VIOLATION OF LAW FOR ANY PERSON, UNLESS THEY ARE ACTING UNDER THE DIRECTION OF A LICENSED PROFESSIONAL ENGINEER, TO ALTER THIS DOCUMENT.

3511561572
MPLSMNE3422_10122684
JOHNNY CAKE
4863 MCANDREWS ROAD
APPLE VALLEY, MN 55124
LTE 2C

SHEET TITLE
PAINTING NOTES

SHEET NUMBER
SP2

THE INFORMATION CONTAINED IN THIS SET OF CONSTRUCTION DOCUMENTS IS PROPRIETARY BY NATURE. ANY USE OR DISCLOSURE OTHER THAN THAT WHICH RELATES TO CARRIER SERVICES IS STRICTLY PROHIBITED.

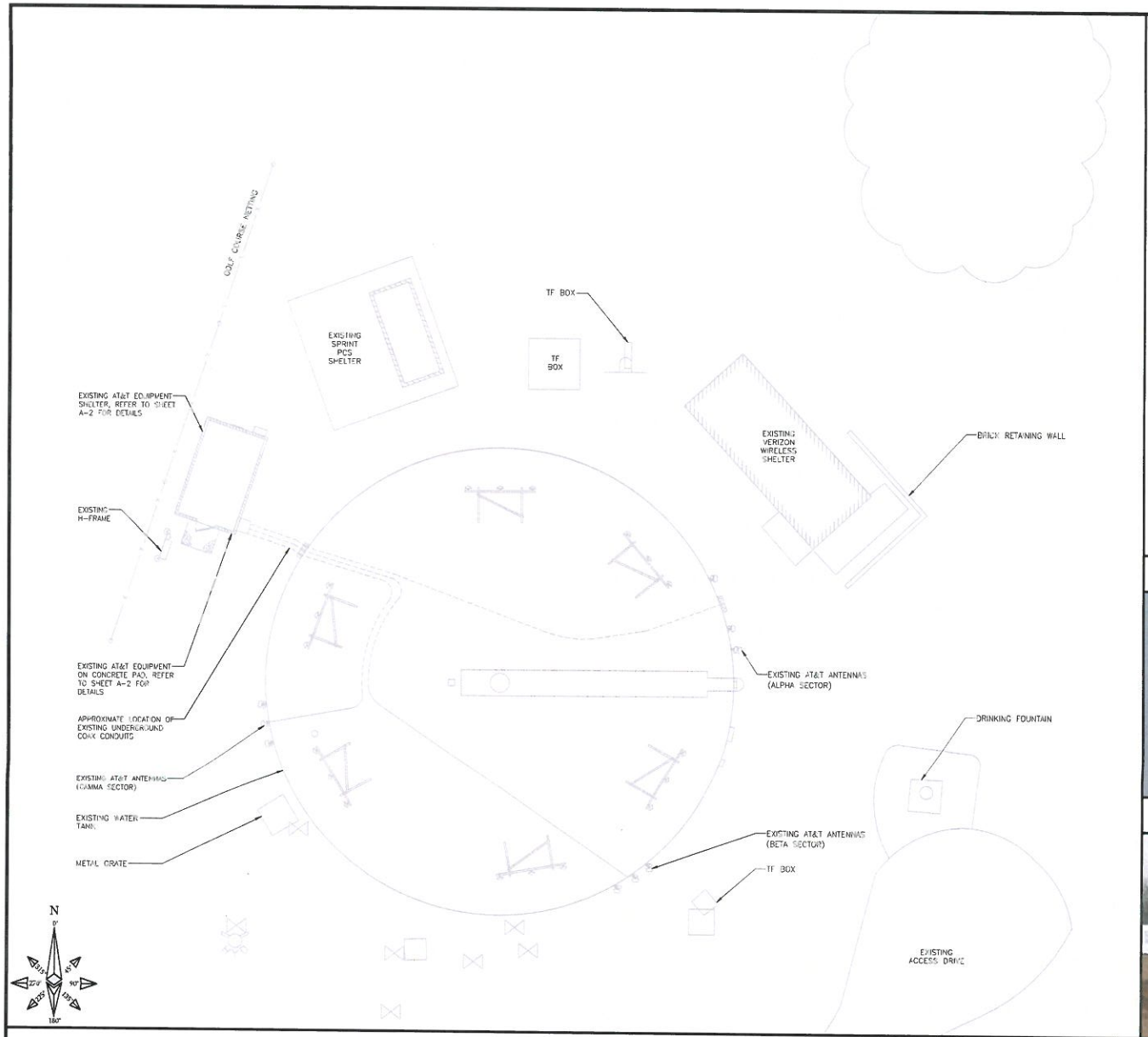

COMPOUND PLAN | 1/8" = 1'-0" | 1

THIS IS NOT AN ALL INCLUSIVE LIST. CONTRACTOR SHALL UTILIZE SPECIFIED EQUIPMENT PART OR ENGINEER APPROVED EQUIVALENT. CONTRACTOR SHALL VERIFY ALL NEEDED EQUIPMENT TO PROVIDE A FUNCTIONAL SITE.

THE PROJECT GENERALLY CONSISTS OF THE FOLLOWING:

PHASE I

PROPOSED –ANTENNA SOLUTION

- INSTALL (3) LTE AWS RRH (1) PER SECTOR (TYPICAL FOR POSITION 1)
- INSTALL (4) 1/2" COAX JUMPERS CONNECTING EACH RRH TO THE AWS SIDE OF ITS ANTENNA POSITION 1
- RELOCATE EXISTING GSM FROM POSITION 1 TO NEW POSITION 3 (TYP OF 3 PER SECTOR)
- RELOCATE EXISTING UMTS TO NEW POSITION 2 TO NEW POSITION 2 (TYP. OF 3 PER SECTOR)
- INSTALL (3) NEW ANTENNA MOUNTING PIPES, (1) PER SECTOR
- INSTALL (6) NEW HPA-65R-BBU-H8-K LTE ANTENNAS TYP OF (2) PER SECTOR IN POSITION 1 & 4
- INSTALL (3) DC/FIBER JUMPERS FROM EACH LTE AWS RRH TO EXISTING DC/FIBER DISTRIBUTION BOX

PROPOSED-POWER SOLUTION
INSTALL (3) 15A BREAKERS, (2) 250A BREAKERS AND ARGUS SHELF IN EXISTING POWER PLANT
PROPOSED-SITE
INSTALL (1) 8 AWG – 6 CONDUCTOR DC TRUNK LINE FROM RAYCAP TO FIBER/DC DISTRIBUTION BOX

PHASE II

- PROPOSED (3) LTE WCS RRH (1) PER SECTOR-(TYP FOR POSITION 4)
- PROPOSED (3) LTE 700 D/E RRH (1) PER SECTOR-(TYP FOR POSITION 4)
- PROPOSED (2) 8AWG – 6 CONDUCTOR DC TRUNK LINE FROM RAYCAP TO FIBER/DC DISTRIBUTION BOX
- PROPOSED (1) RAYCAP FC12-PC6-10E

SCOPE OF WORK

SITE PHOTO 1

SITE PHOTO 2

at&t
4300 MARKET POINT DRIVE
BLOOMINGTON, MN 55435

SAC WIRELESS ENGINEERING GROUP
1501 E. WOODFIELD ROAD, SUITE #300E
SCHAUMBURG, IL 60173
www.sacw.com
847-944-1600

LETS
LETS America, Inc.
112 S. KYRENE RD. STE. 1
CHANDLER, AZ 85226
ARIZONA: 480-961-9151

SITE ID:	MPLSMNE3422
DRAWN BY:	LETS
CHECKED BY:	MC

REV	DATE	DESCRIPTION
1	12/03/15	CLIENT COMMENTS
C	05/19/14	ISSUED FOR CONSTRUCTION
B	03/24/14	ISSUED FOR REVIEW
A	03/21/14	ISSUED FOR REVIEW

I hereby certify that this plan, specification, or report was prepared by me or under my direct supervision and that I am a duly Licensed Professional Structural Engineer under the laws of the State of Minnesota.
Print Name: MADHAN KUMAR KANTHA SAMY
Signature:
Date: 12/03/15 License # 51479

IT IS A VIOLATION OF LAW FOR ANY PERSON, UNLESS THEY ARE ACTING UNDER THE DIRECTION OF A LICENSED PROFESSIONAL ENGINEER, TO ALTER THIS DOCUMENT.

3511561572
MPLSMNE3422_10122684
JOHNNY CAKE
4863 MCANDREWS ROAD
APPLE VALLEY, MN 55124
LTE 2C

SHEET TITLE
COMPOUND PLAN

SHEET NUMBER
A1

THE INFORMATION CONTAINED IN THIS SET OF CONSTRUCTION DOCUMENTS IS PROPRIETARY BY NATURE. ANY USE OR DISCLOSURE OTHER THAN THAT WHICH RELATES TO CARRIER SERVICES IS STRICTLY PROHIBITED.

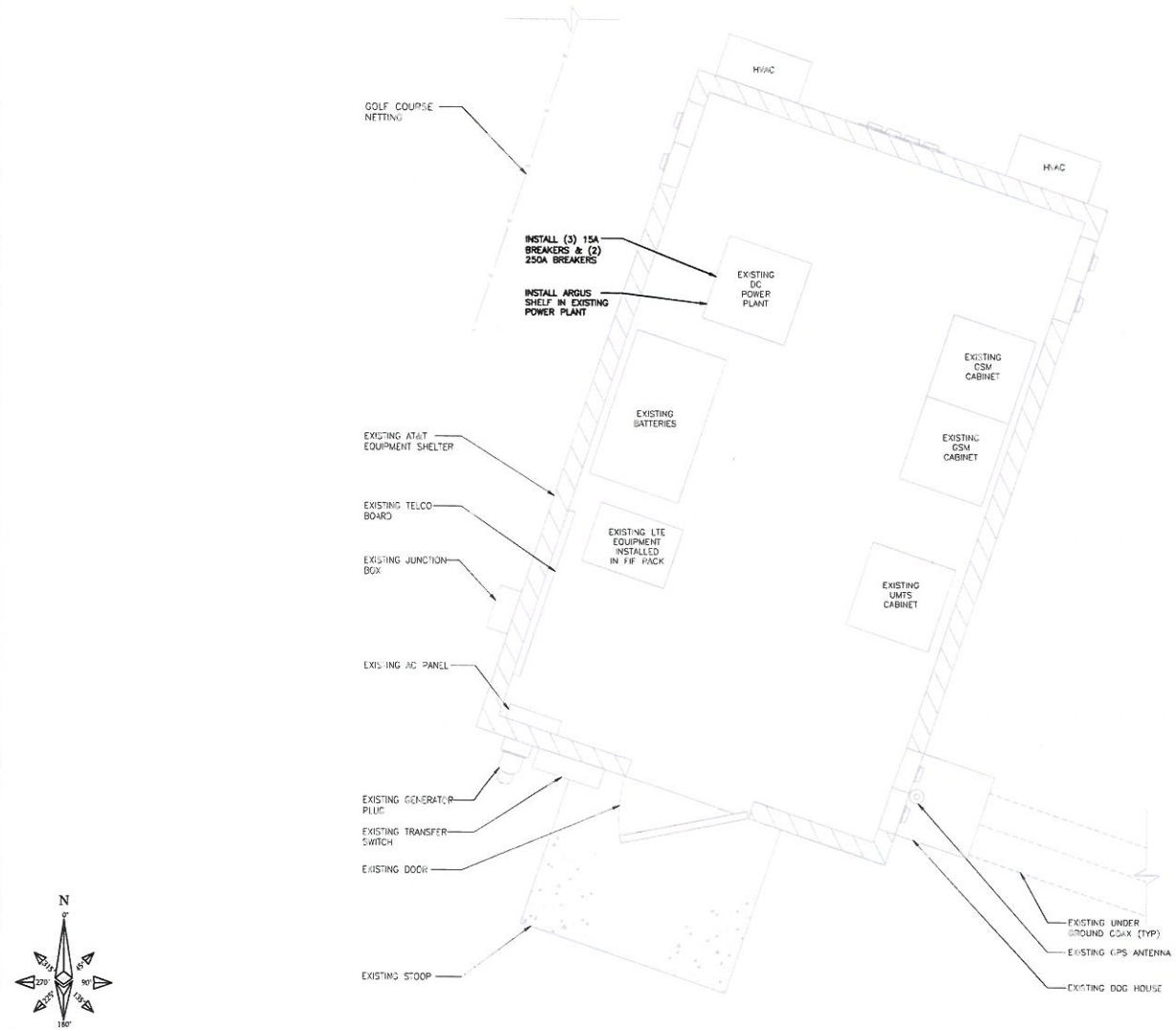

EQUIPMENT PLAN

3/4" = 1'-0"

1

THE INFORMATION CONTAINED IN THIS SET OF CONSTRUCTION DOCUMENTS IS PROPRIETARY BY NATURE. ANY USE OR DISCLOSURE OTHER THAN THAT WHICH RELATES TO CARRIER SERVICES IS STRICTLY PROHIBITED.

at&t
4300 MARKET POINT DRIVE
BLOOMINGTON, MN 55435

SAC WIRELESS ENGINEERING GROUP
1501 E. WOODFIELD ROAD, SUITE #300E
SCHAUMBURG, IL 60173
www.sacw.com
847-944-1600

LETS
LETS America, Inc.
112 S. KYRENE RD. STE. 1
CHANDLER, AZ 85226
ARIZONA: 480-961-9151

SITE ID:	MPLSMNE3422
DRAWN BY:	LETS
CHECKED BY:	MC

REV	DATE	DESCRIPTION
1	12/03/15	CLIENT COMMENTS
0	05/19/14	ISSUED FOR CONSTRUCTION
B	03/24/14	ISSUED FOR REVIEW
A	03/21/14	ISSUED FOR REVIEW

I hereby certify that this plan, specification, or report was prepared by me or under my direct supervision and that I am a duly Licensed Professional Structural Engineer under the laws of the State of Minnesota.
Print Name: MADHAN KUMAR KANTHA SAMY
Signature:
Date: 12/03/15 License # 51479

IT IS A VIOLATION OF LAW FOR ANY PERSON, UNLESS THEY ARE ACTING UNDER THE DIRECTION OF A LICENSED PROFESSIONAL ENGINEER, TO ALTER THIS DOCUMENT.

3511561572
MPLSMNE3422_10122684
JOHNNY CAKE
4863 MCANDREWS ROAD
APPLE VALLEY, MN 55124
LTE 2C

SHEET TITLE
EQUIPMENT PLAN

SHEET NUMBER
A2

THE EXISTING TOWER SHALL BE ANALYZED TO DETERMINE ITS STRUCTURAL CAPACITY TO CARRY THE PROPOSED COAX AND ANTENNAS. THESE DRAWINGS HAVE BEEN CREATED BASED ON THE ASSUMPTION THAT THE TOWER HAS SUFFICIENT CAPACITY TO SUPPORT THE PROPOSED LOADS. THE STRUCTURAL ANALYSIS IS TO BE COMPLETED BY THE TOWER OWNER.

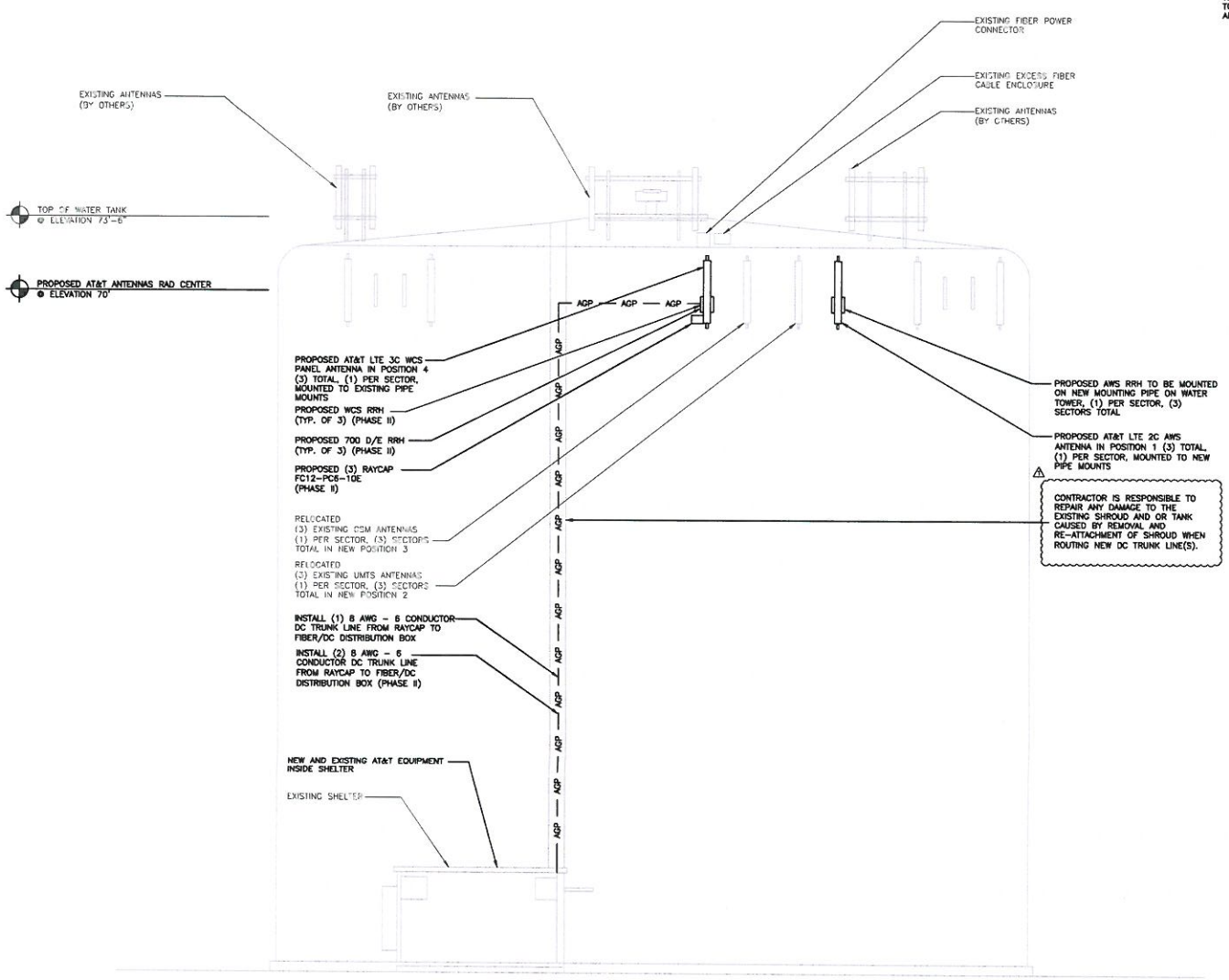

PROPOSED TOWER ELEVATION

3/32" = 1'-0"

1

THE INFORMATION CONTAINED IN THIS SET OF CONSTRUCTION DOCUMENTS IS PROPRIETARY BY NATURE. ANY USE OR DISCLOSURE OTHER THAN THAT WHICH RELATES TO CARRIER SERVICES IS STRICTLY PROHIBITED.

at&t
4300 MARKET POINT DRIVE
BLOOMINGTON, MN 55435

SAC WIRELESS ENGINEERING GROUP
1501 E. WOODFIELD ROAD, SUITE #300E
SCHAUMBURG, IL 60173
www.sacw.com
847-944-1600

LETS
LETS America, Inc.
112 S. KYRENE RD. STE. 1
CHANDLER, AZ 85226
ARIZONA: 480-961-9151

SITE ID:	MPLSMNE3422
DRAWN BY:	LETS
CHECKED BY:	MC

REV	DATE	DESCRIPTION
1	12/03/15	CLIENT COMMENTS
C	05/19/14	ISSUED FOR CONSTRUCTION
B	03/24/14	ISSUED FOR REVIEW
A	03/21/14	ISSUED FOR REVIEW

I hereby certify that this plan, specification, or report was prepared by me or under my direct supervision and that I am a duly Licensed Professional Structural Engineer under the laws of the State of Minnesota.
Print Name: MADHAN KUMAR KANTHA SAMY
Signature:
Date: 12/03/15 License # 51479

IT IS A VIOLATION OF LAW FOR ANY PERSON, UNLESS THEY ARE ACTING UNDER THE DIRECTION OF A LICENSED PROFESSIONAL ENGINEER, TO ALTER THIS DOCUMENT.

3511561572
MPLSMNE3422_10122684
JOHNNY CAKE
4863 MCANDREWS ROAD
APPLE VALLEY, MN 55124
LTE 2C

SHEET TITLE
TOWER ELEVATION

SHEET NUMBER
A3

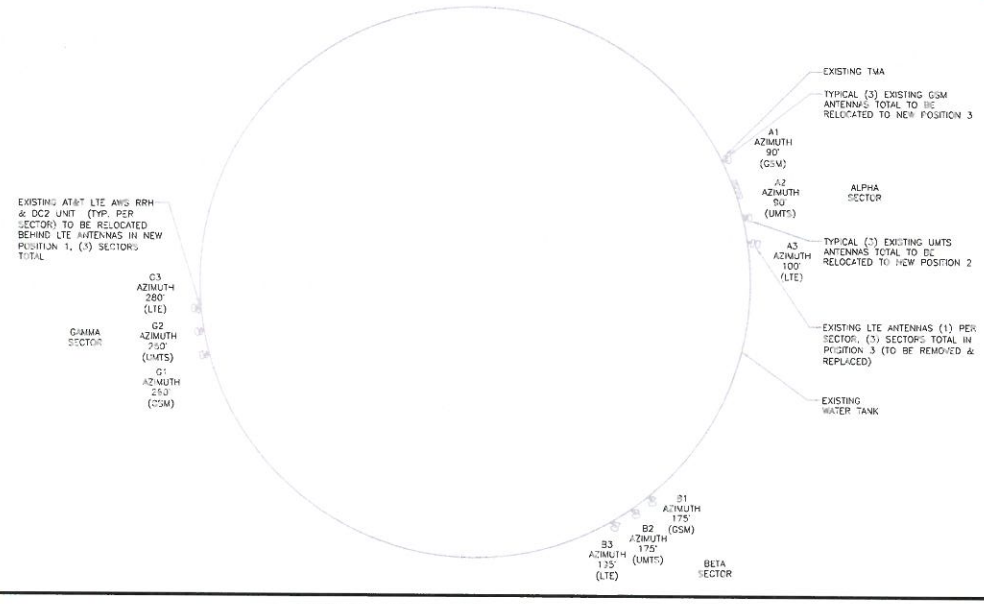

EXISTING ANTENNA LAYOUT PLAN | 1/8" = 1'-0" | 1

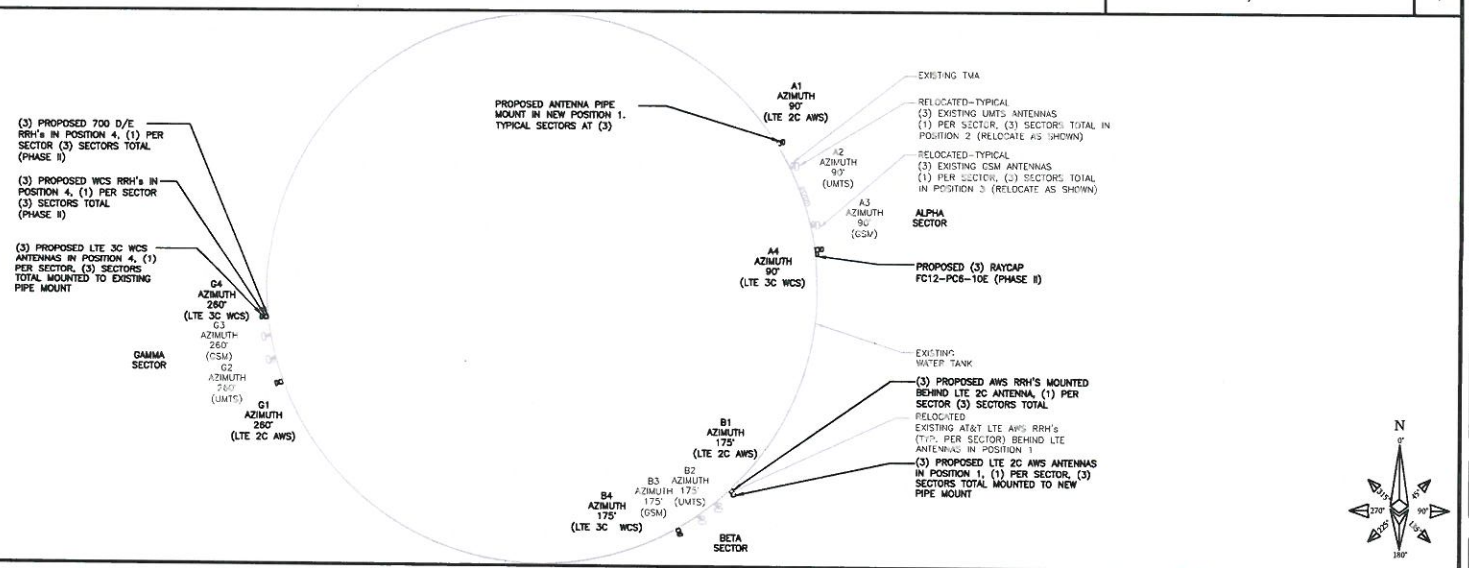

PROPOSED ANTENNA LAYOUT PLAN | 1/8" = 1'-0" | 2

THE INFORMATION CONTAINED IN THIS SET OF CONSTRUCTION DOCUMENTS IS PROPRIETARY BY NATURE. ANY USE OR DISCLOSURE OTHER THAN THAT WHICH RELATES TO CARRIER SERVICES IS STRICTLY PROHIBITED.

at&t
4300 MARKET POINT DRIVE
BLOOMINGTON, MN 55435

SAC WIRELESS ENGINEERING GROUP
1501 E. WOODFIELD ROAD, SUITE #300E
SCHAUMBURG, IL 60173
www.sacw.com
847-944-1600

LETS
LETS America, Inc.
112 S. KYRENE RD. STE. 1
CHANDLER, AZ 85226
ARIZONA: 480-961-9151

SITE ID:	MPLSMNE3422
DRAWN BY:	LETS
CHECKED BY:	MC

REV	DATE	DESCRIPTION
1	12/03/15	CLIENT COMMENTS
D	05/19/14	ISSUED FOR CONSTRUCTION
B	03/24/14	ISSUED FOR REVIEW
A	03/21/14	ISSUED FOR REVIEW

I hereby certify that this plan, specification, or report was prepared by me or under my direct supervision and that I am a duly Licensed Professional Structural Engineer under the laws of the State of Minnesota.
Print Name: MADHAN KUMAR KANTHA SAMY
Signature:
Date: 12/03/15 License # 51479

IT IS A VIOLATION OF LAW FOR ANY PERSON, UNLESS THEY ARE ACTING UNDER THE DIRECTION OF A LICENSED PROFESSIONAL ENGINEER, TO ALTER THIS DOCUMENT.

3511561572
MPLSMNE3422_10122684
JOHNNY CAKE
4863 MCANDREWS ROAD
APPLE VALLEY, MN 55124
LTE 2C

SHEET TITLE
ANTENNA & COAX PLANS

SHEET NUMBER
A4

EXISTING ANTENNA AND TRANSMISSION CABLE REQUIREMENTS

SECTOR	ANTENNA TYPE	ANTENNA AZIMUTH	TILT			CENTERLINE ELEVATION	COAXIAL CABLE			FIBER TRUNK	FIBER JUMP
			MECH.	ELEC.			QTY.	LENGTH	DIA.		
A1	P65-17-XLH-RR POWERWAVE	90°	0	–	–	70'	EXIST.	178.05'	1 5/8"		
A2	P65-17-XLH-RR POWERWAVE	90°	0	2	–	70'	EXIST.	178.05'	1 5/8"	EXISTING	EXISTING
A3	P65-17-XLH-RR POWERWAVE	100°	0	1	1	70'	EXIST.	178.05'	FIBER		
B1	P65-17-XLH-RR POWERWAVE	175°	0	–	–	70'	EXIST.	178.05'	1 5/8"		
B2	P65-17-XLH-RR POWERWAVE	175°	0	2	–	70'	EXIST.	178.05'	1 5/8"	EXISTING	EXISTING
B3	P65-17-XLH-RR POWERWAVE	195°	0	2	2	70'	EXIST.	178.05'	FIBER		
G1	KATHREIN 80010766	260°	0	–	–	70'	EXIST.	178.05'	1 5/8"		
G2	KATHREIN 80010766	260°	0	2	–	70'	EXIST.	178.05'	1 5/8"	EXISTING	EXISTING
G3	KATHREIN 80010766	280°	0	7	7	70'	EXIST.	178.05'	FIBER		

PROPOSED ANTENNA AND TRANSMISSION CABLE REQUIREMENTS

SECTOR	ANTENNA TYPE	ANTENNA AZIMUTH	TILT			CENTERLINE ELEVATION	COAXIAL CABLE			FIBER TRUNK	FIBER JUMP
			MECH.	ELEC.			QTY.	LENGTH	DIA.		
A1	HPA-65R-BUU-H8-K	90°	0	1	–	70'	–	178.05'	FIBER	FB-L988-002-50000	FB-L988-035-50000
A6	HPA-65R-BUU-H8-K	90°	0	–	–	70'	–	178.05'	FIBER	FB-L988-002-50000	FB-L988-035-50000
B1	HPA-65R-BUU-H8-K	175°	0	–	0	70'	–	178.05'	FIBER	FB-L988-002-50000	FB-L988-035-50000
B6	HPA-65R-BUU-H8-K	175°	0	0	0	70'	–	178.05'	FIBER	FB-L988-002-50000	FB-L988-035-50000
G1	HPA-65R-BUU-H8-K	260°	0	–	3	70'	–	178.05'	FIBER	FB-L988-002-50000	FB-L988-035-50000
G6	HPA-65R-BUU-H8-K	260°	0	–	–	70'	–	178.05'	FIBER	FB-L988-002-50000	FB-L988-035-50000

REMOTE RADIO HEADS

SECTOR	RRH TYPE	RRH LOCATION (MAX. DISTANCE FROM S.S.)	MINIMUM CLEARANCES				DC JUMPER CABLE	
			ABOVE	BELOW	SIDES		QTY	DIA.
A1	ALCATEL – LUCENT (700 MHz)	16.4'	16"	8"	0"		2	1/2"
	ALCATEL – LUCENT (AWS)	16.4'	16"	8"	0"		4	1/2"
A4	ALCATEL – LUCENT (700 D/E) PHASE II	16.4'	16"	8"	0"		2	1/2"
	ALCATEL – LUCENT (WCS) PHASE II	16.4'	16"	8"	0"		4	1/2"
B1	ALCATEL – LUCENT (700 MHz)	16.4'	16"	8"	0"		2	1/2"
	ALCATEL – LUCENT (AWS)	16.4'	16"	8"	0"		4	1/2"
B4	ALCATEL – LUCENT (700 D/E) PHASE II	16.4'	16"	8"	0"		2	1/2"
	ALCATEL – LUCENT (WCS) PHASE II	16.4'	16"	8"	0"		4	1/2"
G1	ALCATEL – LUCENT (700 MHz)	16.4'	16"	8"	0"		2	1/2"
	ALCATEL – LUCENT (AWS)	16.4'	16"	8"	0"		4	1/2"
G4	ALCATEL – LUCENT (700 D/E) PHASE II	16.4'	16"	8"	0"		2	1/2"
	ALCATEL – LUCENT (WCS) PHASE II	16.4'	16"	8"	0"		4	1/2"

SURGE SUPPRESSION SYSTEM

MANUFACTURER	PART NUMBER	QTY	LOCATION
RAYCAP	DC6-48-60-RM	1	MOUNTED INSIDE POWER PLANT
RAYCAP	DC2-48-60-0-8E	1	MOUNTED ON EXISTING WATER TANK
RAYCAP	FC12-PC6-10E	1	MOUNTED ON EXISTING WATER TANK (PHASE II)

ANTENNA AND EQUPIMENT REQUIREMENTS
(PER RFDS DATED 03/07/14)

NO SCALE | 1

NOTES

1. WEATHERPROOFING OF ALL COAX CABLE SHALL BE PERFORMED PER MANUFACTURER'S RECOMMENDATIONS.
2. FIBER TO BE ROUTED WITH LONG SWEEPING BENDS. NO 90° BENDS ARE ALLOWED

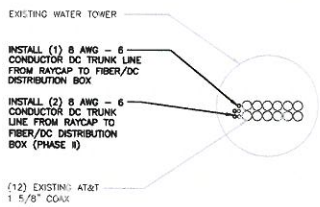

COAX ROUTING DIAGRAM

3/4" = 1'-0" | 2

THE INFORMATION CONTAINED IN THIS SET OF CONSTRUCTION DOCUMENTS IS PROPRIETARY BY NATURE. ANY USE OR DISCLOSURE OTHER THAN THAT WHICH RELATES TO CARRIER SERVICES IS STRICTLY PROHIBITED.

at&t
4300 MARKET POINT DRIVE
BLOOMINGTON, MN 55435

SAC WIRELESS ENGINEERING GROUP
1501 E. WOODFIELD ROAD, SUITE #300E
SCHAUMBURG, IL 60173
www.sacw.com
847-944-1600

LETS
LETS America, Inc.
112 S. KYRENE RD. STE. 1
CHANDLER, AZ 85226
ARIZONA: 480-961-9151

SITE ID:	MPLSMNE3422
DRAWN BY:	LETS
CHECKED BY:	MC

REV	DATE	DESCRIPTION
1	12/03/15	CLIENT COMMENTS
0	05/19/14	ISSUED FOR CONSTRUCTION
B	03/24/14	ISSUED FOR REVIEW
A	03/21/14	ISSUED FOR REVIEW

I hereby certify that this plan, specification, or report was prepared by me or under my direct supervision and that I am a duly Licensed Professional Structural Engineer under the laws of the State of Minnesota.
Print Name: MADHAN KUMAR KANTHA SAMY
Signature:
Date: 12/03/15 License # 51479

IT IS A VIOLATION OF LAW FOR ANY PERSON, UNLESS THEY ARE ACTING UNDER THE DIRECTION OF A LICENSED PROFESSIONAL ENGINEER, TO ALTER THIS DOCUMENT.

3511561572
MPLSMNE3422_10122684
JOHNNY CAKE
4863 MCANDREWS ROAD
APPLE VALLEY, MN 55124
LTE 2C

SHEET TITLE
TOWER TOP DIAGRAMS

SHEET NUMBER
A5

CCI ANTENNAS HPA-65R-BUU-H8-K

DIMENSIONS, HxWxD:	92.4"x14.8"x7.4"
SURVIVAL WIND SPEED:	>150 MPH
FRONT WIND LOAD:	332 LBS. @ 100 MPH
SIDE WIND LOAD:	193 LBS. @ 100 MPH
EQUIVALENT FLAT PLATE AREA:	13 SQ. FT.
WEIGHT, WITHOUT MOUNTING:	68 LBS.
RET SYSTEM WEIGHT:	5.0 LBS.
CONNECTOR:	6; 7-16 DIN FEMALE LONG NECK
MOUNTING POLE:	2-5 INCHES

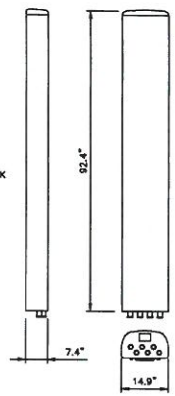

PROPOSED LTE ANTENNA (ALPHA, BETA & GAMMA) | NO SCALE | 1

ALCATEL-LUCENT RRH2X40-AWS

DIMENSIONS, WXDXH:	24.4"X10.63"X6.7"
WEIGHT, WITHOUT BRACKETS:	44 LBS

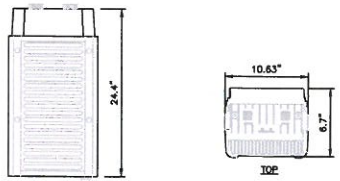

RRH SPECIFICATIONS | NO SCALE | 2

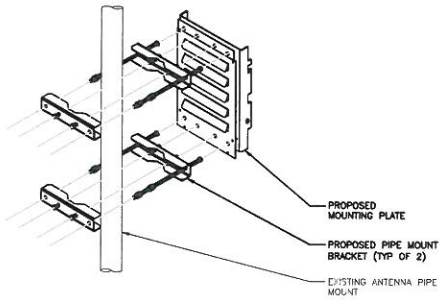

RRH MOUNTING PLATE DETAIL | NO SCALE | 3

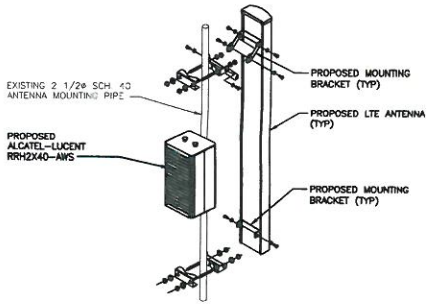

ANTENNA MOUNTING WITH RRH DETAIL | NO SCALE | 4

NOT USED | NO SCALE | 5

NOT USED | NO SCALE | 6

at&t
4300 MARKET POINT DRIVE
BLOOMINGTON, MN 55435

SAC WIRELESS ENGINEERING GROUP
1501 E. WOODFIELD ROAD, SUITE #300E
SCHAUMBURG, IL 60173
www.sacw.com
847-944-1600

LETS
LETS America, Inc.
112 S. KYRENE RD. STE. 1
CHANDLER, AZ 85226
ARIZONA: 480-961-9151

SITE ID:	MPLSMNE3422
DRAWN BY:	LETS
CHECKED BY:	MC

REV	DATE	DESCRIPTION
1	12/03/15	CLIENT COMMENTS
C	05/19/14	ISSUED FOR CONSTRUCTION
B	03/24/14	ISSUED FOR REVIEW
A	03/21/14	ISSUED FOR REVIEW

I hereby certify that this plan, specification, or report was prepared by me or under my direct supervision and that I am a duly Licensed Professional Structural Engineer under the laws of the State of Minnesota.
Print Name: MADHAN KUMAR KANTHA SAMY
Signature:
Date: 12/03/15 License # 51479

IT IS A VIOLATION OF LAW FOR ANY PERSON, UNLESS THEY ARE ACTING UNDER THE DIRECTION OF A LICENSED PROFESSIONAL ENGINEER, TO ALTER THIS DOCUMENT.

3511561572
MPLSMNE3422_10122684
JOHNNY CAKE
4863 MCANDREWS ROAD
APPLE VALLEY, MN 55124
LTE 2C

SHEET TITLE
TOWER EQUIPMENT DETAILS

SHEET NUMBER
A6

THE INFORMATION CONTAINED IN THIS SET OF CONSTRUCTION DOCUMENTS IS PROPRIETARY BY NATURE. ANY USE OR DISCLOSURE OTHER THAN THAT WHICH RELATES TO CARRIER SERVICES IS STRICTLY PROHIBITED.

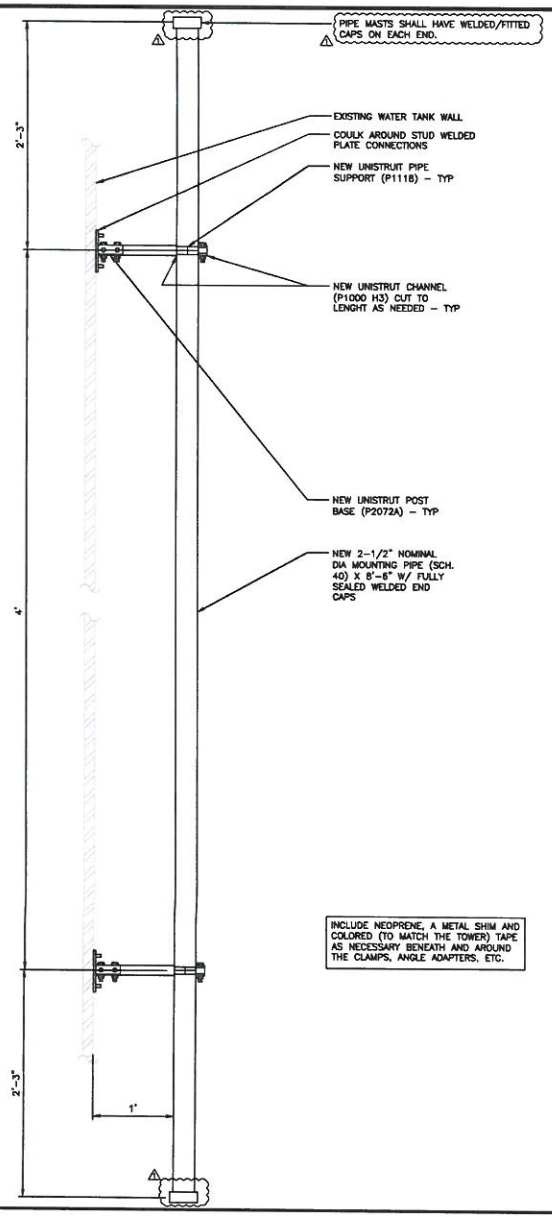

INCLUDE NEOPRENE, A METAL SHIM AND COLORED (TO MATCH THE TOWER) TAPE AS NECESSARY BENEATH AND AROUND THE CLAMPS, ANGLE ADAPTERS, ETC.

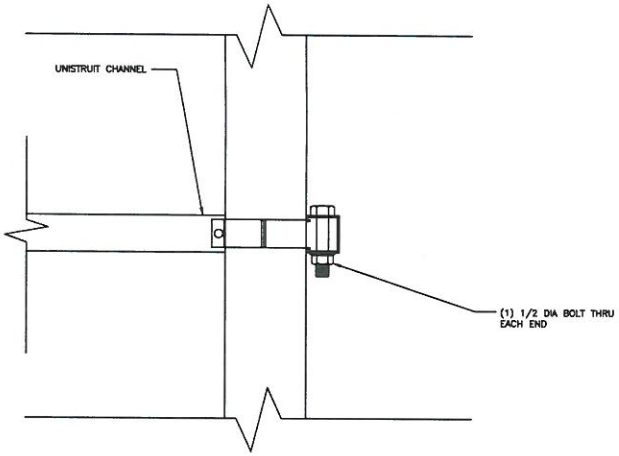

1. NEW UNISTRUT P2072A POST BASES INSTALLED AS REQUIRED.
2. STUD WELD 1/2 DIAM THREADED STUD TO TANK WALL @ EACH LOCATION INDICATED, FILLET WELDS WILL NOT BE ALLOWED.
3. TORQUE NUT TO 40FT-LBS FOR 20 UNF AND 35FT-LBS FOR 13 UNC.
4. BRACKETS TO BE PLACED ALONG SIDE FACE OF PILASTER

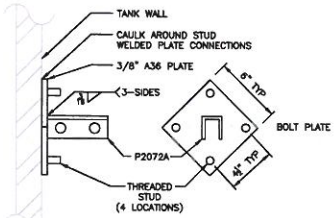

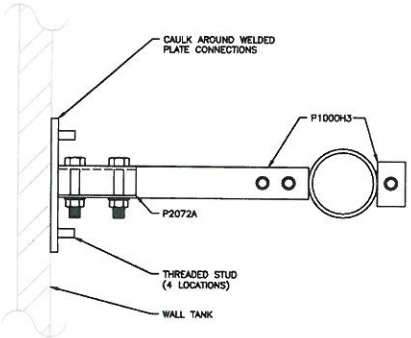

NEW ANTENNA MOUNTING DETAILS

NO SCALE | 1

THE INFORMATION CONTAINED IN THIS SET OF CONSTRUCTION DOCUMENTS IS PROPRIETARY BY NATURE. ANY USE OR DISCLOSURE OTHER THAN THAT WHICH RELATES TO CARRIER SERVICES IS STRICTLY PROHIBITED.

at&t
4300 MARKET POINT DRIVE
BLOOMINGTON, MN 55435

SAC WIRELESS ENGINEERING GROUP
1501 E. WOODFIELD ROAD, SUITE #300E
SCHAUMBURG, IL 60173
www.sacw.com
847-944-1600

LETS
LETS America, Inc.
112 S. KYRENE RD. STE. 1
CHANDLER, AZ 85226
ARIZONA: 480-961-9151

SITE ID:	MPLSMNE3422
DRAWN BY:	LETS
CHECKED BY:	MC

REV	DATE	DESCRIPTION
1	12/03/15	CLIENT COMMENTS
0	05/19/14	ISSUED FOR CONSTRUCTION
B	03/24/14	ISSUED FOR REVIEW
A	03/21/14	ISSUED FOR REVIEW

I hereby certify that this plan, specification, or report was prepared by me or under my direct supervision and that I am a duly Licensed Professional Structural Engineer under the laws of the State of Minnesota.
Print Name: MADHAN KUMAR KANTHA SAMY
Signature:
Date: 12/03/15 License # 51479

IT IS A VIOLATION OF LAW FOR ANY PERSON, UNLESS THEY ARE ACTING UNDER THE DIRECTION OF A LICENSED PROFESSIONAL ENGINEER, TO ALTER THIS DOCUMENT.

3511561572
MPLSMNE3422_10122684
JOHNNY CAKE
4863 MCANDREWS ROAD
APPLE VALLEY, MN 55124
LTE 2C

SHEET TITLE
TOWER EQUIPMENT DETAILS

SHEET NUMBER
A7

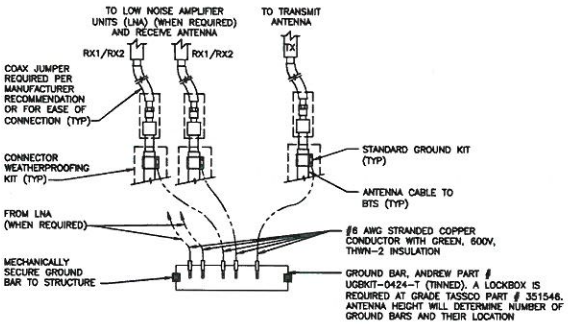

ANTENNA GROUNDING BAR DETAIL | NO SCALE | 1

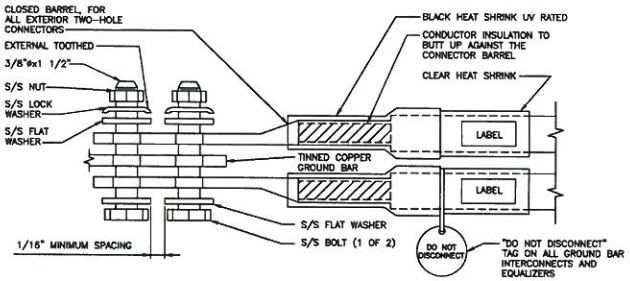

NOTES:

1. EXOTHERMIC WELD (2) TWO, #2 AWG BARE TINNED SOLID COPPER CONDUCTORS TO GROUND BAR. ROUTE CONDUCTORS TO BURIED GROUND RING AND PROVIDE PARALLEL EXOTHERMIC WELD.
2. ALL GROUND BARS SHALL BE STAMPED IN TO THE METAL "IF STOLEN DO NOT RECYCLE." THE CONTRACTOR SHALL USE PERMANENT MARKER TO DRAW THE LINES BETWEEN EACH SECTION AND LABEL EACH SECTION ("P", "A", "I") WITH 1" HIGH LETTERS.
3. ALL HARDWARE SHALL BE STAINLESS STEEL 3/8" DIAMETER OR LARGER. ALL HARDWARE 18-8 STAINLESS STEEL INCLUDING LOCK WASHERS, COAT ALL SURFACES WITH AN ANTI-OXIDANT COMPOUND BEFORE MATING.
4. FOR GROUND BOND TO STEEL ONLY: INSERT A CADMIUM FLAT WASHER BETWEEN LUG AND STEEL, COAT ALL SURFACES WITH AN ANTI-OXIDANT COMPOUND BEFORE MATING.
5. DO NOT INSTALL CABLE GROUND KIT AT A BEND AND ALWAYS DIRECT GROUND CONDUCTOR DOWN TO GROUND BUS.
6. NUT & WASHER SHALL BE PLACED ON THE FRONT SIDE OF THE GROUND BAR AND BOLTED ON THE BACK SIDE. INSTALL BLACK HEAT-SHRINKING TUBE, 600 VOLT INSULATION, ON ALL GROUND TERMINATIONS. THE INTENT IS TO WEATHERPROOF THE COMPRESSION CONNECTION.
7. SUPPLIED AND INSTALLED BY CONTRACTOR.
8. THE CONTRACTOR SHALL BE RESPONSIBLE FOR INSTALLING ADDITIONAL GROUND BAR AS REQUIRED, PROVIDING 50% SPARE CONNECTION POINTS.
9. ENSURE THE WIRE INSULATION TERMINATION IS WITHIN 1/8" OF THE BARREL (NO SHINERS).
10. BOLTS SHALL BE MADE "SNUG-TIGHT" PLUS 1/4 TURN.

EXTERIOR TWO HOLE LUG DETAIL | NO SCALE | 2

NEWTON INSTRUMENT COMPANY, INC.
BUTNER, N.C.

NO	REQUIRED	PART NUMBER	DESCRIPTION
1	1	1/4"x4"x30"	SOLID GROUND BAR
2	2	A-6058	WALL MOUNTING BRACKET
3	2	3061-4	INSULATORS
4	4	3012-1	5/8"-11x1" H.H.C.S.
5	4	3015-8	5/8" LOCKWASHER

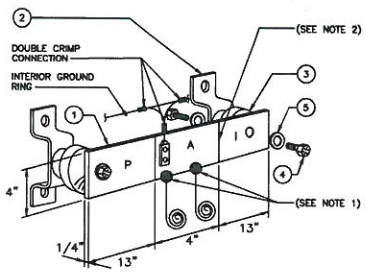

EACH GROUND CONDUCTOR TERMINATING ON ANY GROUND BAR SHALL HAVE AN IDENTIFICATION TAG ATTACHED AT EACH END THAT WILL IDENTIFY ITS ORIGIN AND DESTINATION

SECTION "P" - SURGE PROTECTORS

(EC) CELL REFERENCE GROUND BAR (IF COLLOCATED)
(EC) GENERATOR FRAMEWORK (IF AVAILABLE) (#2 AWG)
(EC) TELCO GROUND BAR (#2 AWG)
(EC) COMMERCIAL POWER COMMON NEUTRAL/GROUND BOND (3/0)
(EC) FIBER GROUND BAR (#2 AWG)
(EC) POWER ROOM REFERENCE GROUND BAR (#2 AWG)
(AT&T) RECTIFIER FRAMES

SECTION "A" - SURGE ABSORBERS

(EC) INTERIOR GROUND RING (#2 AWG)
(EC) EXTERNAL EARTH GROUND FIELD (BURIED GROUND RING) (#2 AWG)
(EC) METALLIC COLD WATER PIPE (IF AVAILABLE) (1/0 AWG)
(EC) BUILDING STEEL (IF AVAILABLE) (1/0 AWG)

SECTION "I" - ISOLATED GROUND ZONE

(AT&T) ALL ISOLATED GROUND REFERENCE
(AT&T) GROUND WINDOW BAR

DETAIL NOTES:

1. EXOTHERMICALLY WELD #2 AWG BARE TINNED SOLID COPPER CONDUCTOR TO GROUND BAR. ROUTE CONDUCTOR TO BURIED GROUND RING AND PROVIDE PARALLEL EXOTHERMIC WELD.
2. THE INSTALLER SHALL USE PERMANENT MARKER TO DRAW THE LIKE BETWEEN SECTION AND LABEL EACH SECTION ("P", "A", "I" WITH 1" HIGH LETTERS

(MGB) REFERENCE GROUNDING BAR DETAIL | NO SCALE | 3

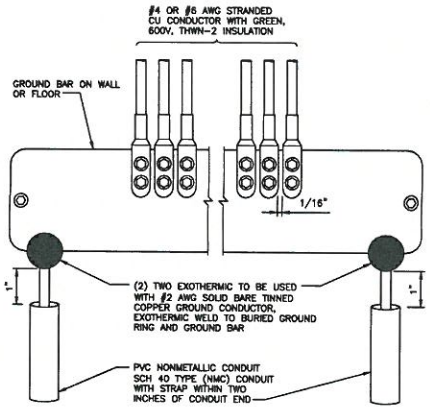

GROUNDING BAR DETAIL | NO SCALE | 4

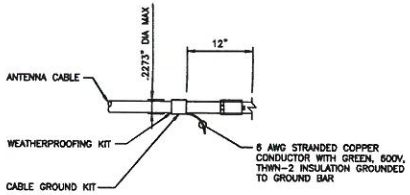

CONNECTION OF CABLE GROUNDING KIT TO ANTENNA CABLE | NO SCALE | 5

THE INFORMATION CONTAINED IN THIS SET OF CONSTRUCTION DOCUMENTS IS PROPRIETARY BY NATURE. ANY USE OR DISCLOSURE OTHER THAN THAT WHICH RELATES TO CARRIER SERVICES IS STRICTLY PROHIBITED.

at&t
4300 MARKET POINT DRIVE
BLOOMINGTON, MN 55435

SAC WIRELESS ENGINEERING GROUP
1501 E. WOODFIELD ROAD, SUITE #300E
SCHAUMBURG, IL 60173
www.sacw.com
847-944-1600

LETS
LETS America, Inc.
112 S. KYRENE RD. STE. 1
CHANDLER, AZ 85226
ARIZONA: 480-861-9151

SITE ID:	MPLSMNE3422
DRAWN BY:	LETS
CHECKED BY:	MC

REV	DATE	DESCRIPTION
1	12/03/15	CLIENT COMMENTS
0	05/19/14	ISSUED FOR CONSTRUCTION
B	03/24/14	ISSUED FOR REVIEW
A	03/21/14	ISSUED FOR REVIEW

I hereby certify that this plan, specification, or report was prepared by me or under my direct supervision and that I am a duly Licensed Professional Structural Engineer under the laws of the State of Minnesota.
Print Name: MADHAN KUMAR KANTHA SAMY
Signature:
Date: 12/03/15 License # 51479

IT IS A VIOLATION OF LAW FOR ANY PERSON, UNLESS THEY ARE ACTING UNDER THE DIRECTION OF A LICENSED PROFESSIONAL ENGINEER, TO ALTER THIS DOCUMENT.

3511561572
MPLSMNE3422_10122684
JOHNNY CAKE
4863 MCANDREWS ROAD
APPLE VALLEY, MN 55124
LTE 2C

SHEET TITLE
GROUNDING DETAILS

SHEET NUMBER
A8

AT&T Coax and Jumper Color Code Chart for MNP

AT&T Main Line Coax and Jumper Color Code Chart for MNP

Sector	Technology	Frequency	TX / RX	Sector Color/ Main Line	Freq Color
Alpha (X)	GSM	850	TXM / RXM	1 Red	1 Orange
Alpha (X)	GSM	850	TXD / RXD	1 Red	1 Orange
Alpha (X)	GSM	1900	TXM / RXM	1 Red	1 Violet
Alpha (X)	GSM	1900	TXD / RXD	1 Red	1 Violet
Alpha (X)	UMTS	850	TXM / RXM	2 Red	1 Orange
Alpha (X)	UMTS	850	TXD / RXD	2 Red	1 Orange
Alpha (X)	UMTS	1900	TXM / RXM	2 Red	1 Violet
Alpha (X)	UMTS	1900	RXD / RXD	2 Red	1 Violet

Any line that has main line coax will be marked with sector color first and frequency second (typically GSM/UMTS).

AT&T LTE/UMTS RRH at top of tower Jumper Color Code Chart for MNP

Sector	Technology	Frequency	TX / RX	Freq Color	Sector Color
Alpha (X)	LTE	700 B/C	TXM / RXM	1 Green	2 Red
Alpha (X)	LTE	700 B/C	TXD / RXD	2 Green	2 Red
Alpha (X)	LTE	700 D/E	TXM / RXM	3 Green	2 Red
Alpha (X)	LTE	700 D/E	TXD / RXD	4 Green	2 Red
Alpha (X)	LTE	850	TXM / RXM	3 Orange	2 Red
Alpha (X)	LTE	850	TXD / RXD	4 Orange	2 Red
Alpha (X)	UMTS	850	TXM / RXM	1 Orange	2 Red
Alpha (X)	UMTS	850	RXD / RXD	2 Orange	2 Red
Alpha (X)	LTE	1900 PCS	TXM / TXM	1 Violet	2 Red
Alpha (X)	LTE	1900 PCS	TXD / TXD	2 Violet	2 Red
Alpha (X)	LTE	1900 PCS	RXM / RXM	3 Violet	2 Red
Alpha (X)	LTE	1900 PCS	RXD / RXD	4 Violet	2 Red
Alpha (X)	UMTS	1900	TXM / RXM	1 Violet	4 Red
Alpha (X)	UMTS	1900	RXD / RXD	2 Violet	4 Red
Alpha (X)	LTE	2100 AWS	TXM / TXM	1 Gray	2 Red
Alpha (X)	LTE	2100 AWS	TXD / TXD	2 Gray	2 Red
Alpha (X)	LTE	2100 AWS	RXM / RXM	3 Gray	2 Red
Alpha (X)	LTE	2100 AWS	RXD / RXD	4 Gray	2 Red
Alpha (X)	LTE	2300 WCS	TXM / RXM	1 Yellow	2 Red
Alpha (X)	LTE	2300 WCS	TXD / RXD	2 Yellow	2 Red
Alpha (X)	LTE	2300 WCS	TXM / RXM	3 Yellow	2 Red
Alpha (X)	LTE	2300 WCS	TXD / RXD	4 Yellow	2 Red

Color coding of jumpers that have RRHs on top of tower will have the frequecy color first then the sector color. Color coding for LTE/UMTS with RRHs on top of tower will only happen on coax from LTE RRH to antenna. Power and fiber lines will be color coded with alternating gray/white (add a stripe for multiple runs) from ground to distro box (DC-6/FC-12) then tagged with written tags to RRH. If DC-2s are in line then you tag all breakout points appropriately.

CABLE COLOR CHART (ALPHA SECTOR) | 1

AT&T Main Line Coax and Jumper Color Code Chart for MNP

Sector	Technology	Frequency	TX / RX	Sector Color/ Main Line	Freq Color
Beta (Y)	GSM	850	TXM / RXM	1 White	1 Orange
Beta (Y)	GSM	850	TXD / RXD	3 White	1 Orange
Beta (Y)	GSM	1900	TXM / RXM	1 White	1 Violet
Beta (Y)	GSM	1900	TXD / RXD	3 White	1 Violet
Beta (Y)	UMTS	850	TXM / RXM	2 White	1 Orange
Beta (Y)	UMTS	850	TXD / RXD	4 White	1 Orange
Beta (Y)	UMTS	1900	TXM / RXM	2 White	1 Violet
Beta (Y)	UMTS	1900	RXD / RXD	4 White	1 Violet

Any line that has main line coax will be marked with sector color first and frequency second (typically GSM/UMTS).

AT&T LTE/UMTS RRH at top of tower Jumper Color Code Chart for MNP

Sector	Technology	Frequency	TX / RX	Freq Color	Sector Color
Beta (Y)	LTE	700 B/C	TXM / RXM	1 Green	2 White
Beta (Y)	LTE	700 B/C	TXD / RXD	2 Green	2 White
Beta (Y)	LTE	700 D/E	TXM / RXM	3 Green	2 White
Beta (Y)	LTE	700 D/E	TXD / RXD	4 Green	2 White
Beta (Y)	LTE	850	TXM / RXM	3 Orange	2 White
Beta (Y)	LTE	850	TXD / RXD	4 Orange	2 White
Beta (Y)	UMTS	850	TXM / RXM	1 Orange	2 White
Beta (Y)	UMTS	850	RXD / RXD	2 Orange	2 White
Beta (Y)	LTE	1900 PCS	TXM / TXM	1 Violet	2 White
Beta (Y)	LTE	1900 PCS	TXD / TXD	2 Violet	2 White
Beta (Y)	LTE	1900 PCS	RXM / RXM	3 Violet	2 White
Beta (Y)	LTE	1900 PCS	RXD / RXD	4 Violet	2 White
Beta (Y)	UMTS	1900	TXM / RXM	1 Violet	3 White
Beta (Y)	UMTS	1900	RXD / RXD	1 Violet	4 White
Beta (Y)	LTE	2100 AWS	TXM / TXM	1 Gray	2 White
Beta (Y)	LTE	2100 AWS	TXD / TXD	2 Gray	2 White
Beta (Y)	LTE	2100 AWS	RXM / RXM	3 Gray	2 White
Beta (Y)	LTE	2100 AWS	RXD / RXD	4 Gray	2 White
Beta (Y)	LTE	2300 WCS	TXM / RXM	1 Yellow	2 White
Beta (Y)	LTE	2300 WCS	TXD / RXD	2 Yellow	2 White
Beta (Y)	LTE	2300 WCS	TXM / RXM	3 Yellow	2 White
Beta (Y)	LTE	2300 WCS	TXD / RXD	4 Yellow	2 White

Color coding of jumpers that have RRHs on top of tower will have the frequecy color first then the sector color. Color coding for LTE/UMTS with RRHs on top of tower will only happen on coax from LTE RRH to antenna. Power and fiber lines will be color coded with alternating gray/white (add a stripe for multiple runs) from ground to distro box (DC-6/FC-12) then tagged with written tags to RRH. If DC-2s are in line then you tag all breakout points appropriately.

CABLE COLOR CHART (BETA SECTOR) | 2

AT&T Main Line Coax and Jumper Color Code Chart for MNP

Sector	Technology	Frequency	TX / RX	Sector Color/ Main Line	Freq Color
Gamma (Z)	GSM	850	TXM / RXM	1 Blue	1 Orange
Gamma (Z)	GSM	850	TXD / RXD	3 Blue	1 Orange
Gamma (Z)	GSM	1900	TXM / RXM	1 Blue	1 Violet
Gamma (Z)	GSM	1900	TXD / RXD	3 Blue	1 Violet
Gamma (Z)	UMTS	850	TXM / RXM	2 Blue	1 Orange
Gamma (Z)	UMTS	850	TXD / RXD	4 Blue	1 Orange
Gamma (Z)	UMTS	1900	TXM / RXM	2 Blue	1 Violet
Gamma (Z)	UMTS	1900	RXD / RXD	4 Blue	1 Violet

Any line that has main line coax will be marked with sector color first and frequency second (typically GSM/UMTS).

AT&T LTE/UMTS RRH at top of tower Jumper Color Code Chart for MNP

Sector	Technology	Frequency	TX / RX	Freq Color	Sector Color
Gamma (Z)	LTE	700 B/C	TXM / RXM	1 Green	2 Blue
Gamma (Z)	LTE	700 B/C	TXD / RXD	2 Green	2 Blue
Gamma (Z)	LTE	700 D/E	TXM / RXM	3 Green	2 Blue
Gamma (Z)	LTE	700 D/E	TXD / RXD	4 Green	2 Blue
Gamma (Z)	LTE	850	TXM / RXM	3 Orange	2 Blue
Gamma (Z)	LTE	850	TXD / RXD	4 Orange	2 Blue
Gamma (Z)	UMTS	850	TXM / RXM	1 Orange	2 Blue
Gamma (Z)	UMTS	850	RXD / RXD	2 Orange	2 Blue
Gamma (Z)	LTE	1900 PCS	TXM / TXM	1 Violet	2 Blue
Gamma (Z)	LTE	1900 PCS	TXD / TXD	2 Violet	2 Blue
Gamma (Z)	LTE	1900 PCS	RXM / RXM	3 Violet	2 Blue
Gamma (Z)	LTE	1900 PCS	RXD / RXD	4 Violet	2 Blue
Gamma (Z)	UMTS	1900	TXM / RXM	1 Violet	3 Blue
Gamma (Z)	UMTS	1900	RXD / RXD	1 Violet	4 Blue
Gamma (Z)	LTE	2100 AWS	TXM / TXM	1 Gray	2 Blue
Gamma (Z)	LTE	2100 AWS	TXD / TXD	2 Gray	2 Blue
Gamma (Z)	LTE	2100 AWS	RXM / RXM	3 Gray	2 Blue
Gamma (Z)	LTE	2100 AWS	RXD / RXD	4 Gray	2 Blue
Gamma (Z)	LTE	2300 WCS	TXM / RXM	1 Yellow	2 Blue
Gamma (Z)	LTE	2300 WCS	TXD / RXD	2 Yellow	2 Blue
Gamma (Z)	LTE	2300 WCS	TXM / RXM	3 Yellow	2 Blue
Gamma (Z)	LTE	2300 WCS	TXD / RXD	4 Yellow	2 Blue

Color coding of jumpers that have RRHs on top of tower will have the frequecy color first then the sector color. Color coding for LTE/UMTS with RRHs on top of tower will only happen on coax from LTE RRH to antenna. Power and fiber lines will be color coded with alternating gray/white (add a stripe for multiple runs) from ground to distro box (DC-6/FC-12) then tagged with written tags to RRH. If DC-2s are in line then you tag all breakout points appropriately.

CABLE COLOR CHART (GAMMA SECTOR) | 3

1. THE ANTENNA SYSTEM COAX SHALL BE LABELED WITH VINYL TAPE.
2. THE STANDARD IS BASED ON EIGHT COLORED TAPES—RED, BLUE, GREEN, YELLOW, ORANGE, BROWN, WHITE, AND VIOLET. THESE TAPES MUST BE 3/4" WIDE & UV RESISTANT SUCH AS SCOTCH 35 VINYL ELECTRICAL COLOR CODING TAPE AND SHOULD BE READILY AVAILABLE TO THE ELECTRICIAN OR CONTRACTOR ON SITE.
3. USING COLOR BANDS ON THE CABLES, MARK ALL RF CABLE BY SECTOR AND CABLE NUMBER AS SHOWN ON "CABLE COLOR CHART".
4. WHEN AN EXISTING COAXIAL LINE THAT IS INTENDED TO BE A SHARED LINE BETWEEN TECHNOLOGIES IS ENCOUNTERED, THE CONTRACTOR SHALL REMOVE THE EXISTING COLOR CODING SCHEME AND REPLACE IT WITH THE COLOR CODING STANDARD. IN THE ABSENCE OF AN EXISTING COLOR CODING AND TAGGING SCHEME, OR WHEN INSTALLING PROPOSED COAXIAL CABLES, THIS GUIDELINE SHALL BE IMPLEMENTED AT THAT SITE REGARDLESS OF TECHNOLOGY.
5. ALL COLOR CODE TAPE SHALL BE 3M-35 AND SHALL BE INSTALLED USING A MINIMUM OF (3) THREE WRAPS OF TAPE AND SHALL BE NEATLY TRIMMED AND SMOOTHED OUT SO AS TO AVOID UNRAVELING.
6. ALL COLOR BANDS INSTALLED AT THE TOP OF THE TOWER SHALL BE A MINIMUM OF 3" WIDE, AND SHALL HAVE A MINIMUM OF 3/4" OF SPACE BETWEEN EACH COLOR.
7. ALL COLOR CODES SHALL BE INSTALLED SO AS TO ALIGN NEATLY WITH ONE ANOTHER FROM SIDE-TO-SIDE.
8. IF EXISTING CABLES AT THE SITE ALREADY HAVE A COLOR CODING SCHEME AND THEY ARE NOT INTENDED TO BE REUSED OR SHARED WITH THE NEW TECHNOLOGY, THE EXISTING COLOR CODING SCHEME SHALL REMAIN UNTOUCHED.

CABLE COLOR CODING & IDENTIFICATION NOTES | 4

ALL RF AND DC CABLE SHALL BE MARKED AS PER CABLE MARKING LOCATIONS TABLE BELOW:

CABLE MARKING LOCATIONS TABLE

NO	LOCATIONS
1	EACH TOP-JUMPER SHALL BE COLOR CODED WITH (1) SET OF 3" WIDE BANDS.
2	EACH MAIN COAX SHALL BE COLOR CODED WITH (1) SET OF 3" WIDE BANDS NEAR THE TOP-JUMPER CONNECTION AND WITH (1) SET OF 3/4" WIDE COLOR BANDS JUST PRIOR TO ENTERING THE BTS OR TRANSMITTER BUILDING.
3	CABLE ENTRY PORT ON THE INTERIOR OF THE SHELTER.
4	ALL BOTTOM JUMPERS SHALL BE COLOR CODED WITH (1) SET OF 3/4" WIDE BANDS ON EACH END OF THE BOTTOM JUMPER.
5	ALL BOTTOM JUMPERS SHALL BE COLOR CODED WITH (1) SET OF 3/4" WIDE BANDS ON EACH END OF THE BOTTOM JUMPER.

CABLE MARKING LOCATIONS TABLE | 5

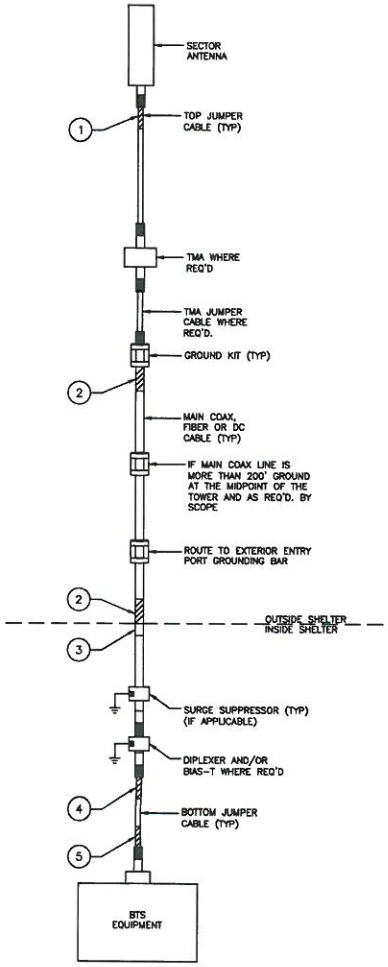

CABLE MARKING LOCATIONS DIAGRAM | 6

at&t
4300 MARKET POINT DRIVE
BLOOMINGTON, MN 55435

SAC WIRELESS ENGINEERING GROUP
1501 E. WOODFIELD ROAD, SUITE #300E
SCHAUMBURG, IL 60173
www.sacw.com
847-944-1600

LETS
LETS America, Inc.
112 S. KYRENE RD. STE. 1
CHANDLER, AZ 85226
ARIZONA: 480-961-9151

SITE ID:	MPLSMNE3422
DRAWN BY:	LETS
CHECKED BY:	MC

REV	DATE	DESCRIPTION
1	12/03/15	CLIENT COMMENTS
0	05/19/14	ISSUED FOR CONSTRUCTION
B	03/24/14	ISSUED FOR REVIEW
A	03/21/14	ISSUED FOR REVIEW

I hereby certify that this plan, specification, or report was prepared by me or under my direct supervision and that I am a duly Licensed Professional Structural Engineer under the laws of the State of Minnesota.
Print Name: MADHAN KUMAR KANTHA SAMY
Signature:
Date: 12/03/15 License # 51479

IT IS A VIOLATION OF LAW FOR ANY PERSON, UNLESS THEY ARE ACTING UNDER THE DIRECTION OF A LICENSED PROFESSIONAL ENGINEER, TO ALTER THIS DOCUMENT.

3511561572
MPLSMNE3422_10122684
JOHNNY CAKE
4863 MCANDREWS ROAD
APPLE VALLEY, MN 55124
LTE 2C

SHEET TITLE
COAX COLOR CODE CHART

SHEET NUMBER
A9

THE INFORMATION CONTAINED IN THIS SET OF CONSTRUCTION DOCUMENTS IS PROPRIETARY BY NATURE. ANY USE OR DISCLOSURE OTHER THAN THAT WHICH RELATES TO CARRIER SERVICES IS STRICTLY PROHIBITED.